Products Manual

Thermostat & Heater

温控器、加热器选型手册

Vol.12

saipwell

Deliver Happiness To Everyone

To create products
that deliver happiness to everyone

铸造充满幸福的产品

CONTENTS

目录

关于赛普

SAIP ELEC.

Deliver happiness to everyone

Us.

赛普电气集团（简称赛普）是一家专业从事电气产品及新能源的研发、制造及营销的专业化电气有限公司。赛普集团已引进国外资深管理与经验丰富的专业人事，以严谨的管理，有创意的研发团队，先进的营销理念，在传统产品的基础上创造和发展了新的更适用的且具有良好性价比的产品。Saip 产品已获得 CE、ROHS、IP66 等国内国际认证。产品已得到机关行业的认证认可，并远销东南亚、中东、东欧及美洲等地域。赛普现在有全球 28 家代理、三个直销公司。赛普已与多家国际化公司建立了良好的长期合作伙伴关系。赛普一如既往地坚持“合作发展，共同提高”的服务宗旨，以真诚的合作态度来最大程度地满足客户的需求。赛普电气—您成功的合作伙伴！

Saip Electric Group Co., Ltd ("Saip" for short) is an enterprise specialized in the design, production and sales of all kinds of electric equipments. Our head office is in Liushi town, the largest manufacturing base of electric equipments of Wenzhou, China. It's very near to Shanghai and Ningbo ports.

Saip has five specialized branches and more than 300 specialized cooperative partners all over the world. As an ISO9001 certificated enterprise, Saip owns modern production lines, advanced quality controlling equipment with scientific administration, professional engineers, highly trained teams technicians and skilled workers.

Now Saip has five design and production bases in Hong Kong, Taiwan, Singapore, Turkey and Shanghai (China Mainland), 28 sales organizations in the world and more than 50 holding member enterprises. Saip products range covers wind energy, solar energy, low voltage appratus, welding machines, instruments and meters, photoelectron, electrical products for construction, automobile apparatus and industrial automation. The products are sold to over 100 countries and regions. All exported products have passed through CE, ROHS, EMC, LVD, IP66, KEMA certificates.

Saip always insists on "high quality and sincere service". Saip—your successful cooperative partner.

Meaning.

赛普的意义

SAIP ELEC.

Deliver happiness to everyone

成为一家持续发展超出 103 年的企业

成为一家超出 20000 名销售员工和 2000 名设计工程师的企业

成为全球电气品牌管理专家

一家环球的高质量的电气组织

为了达到最高的质量水准

所有产品均按照 IEC 国际电工委员会的标准生产。

to be an enterprise lasting 103 years and beyond

To be an enterprise with a network of 20000 sales personnel and 2000 design engineers

To be the choice brand manager of major worldwide electrical brands

A global quality electric organization

In order to obtain the highest quality all of

Products according to international iec normatives.

铸造充满幸福的产品

To create products that deliver happiness to everyone

Concept.

赛普的理念

SAIP ELEC.

Deliver happiness to everyone

商业原则
BUSINESS PRINCIPLE

做简单的生意 简单地做生意

To conduct business in a simple straightforward manner.

企业精神
CORPORATE SPIRIT

耐心 细心

Patience Dedication

人生观
HUMAN PRINCIPLE

客户至上 员工第一 股东第二

Customers are our topmost priority, followed by our employees and stakeholders

工作观
WORKING PRINCIPLE

快乐工作 幸福生活

To work and live happily

产品观
PRODUCT PRINCIPLE

文化电气 / 幸福电气 / 品质电气 / 信息电气 / 便捷电气

To manufacture quality, innovative products that bring convenience to its users

Value

赛普的价值观

SAIP ELEC.

Deliver happiness to everyone

人人平等—充分尊重，处理问题，对事不对人
相互信任—敢于担当深知彼此信任的力量
奉献—乐于付出，以司为家
坚持—专业执着，完善自我，不断进步。
创新—承接变化，勇于创新

Equality— Fully respect, and focus on the issue rather than the person.
Trust— Believe in the power of trust and be brave in trusting others.
Dedication— Be willing to sacrifice and take the company as home.
Persistence— Never say never.
Innovation — Accept changes, and be bold to innovate.

Honor

赛普的证书 +

SAIP ELEC.

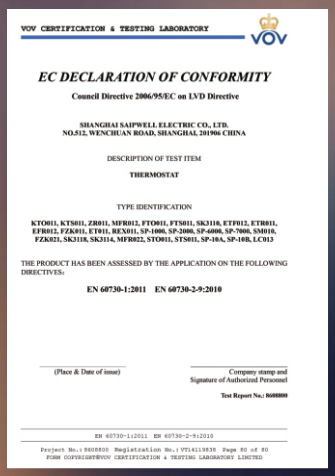

铸造充满幸福的产品

To create products
that deliver happiness to everyone

SAIP ELECT.

Index.

产品索引

KTO KTS SMALL COMPACT THERMOSTAT
小型自动恒温控制器

KTS 011(NO)

KTO 011(NC)

KTO 011/KTS 011

产品特性 Features

- 宽范围温度设置 Large setting range
- 小尺寸 Small size
- 安装简单 Simple to mount
- 灵敏度高 High switching performance

KTO 011: 温控器(常闭)，用于调控加热器。
KTS 011: 温控器(常开)，当温度超出设定值时开关装置可以启动风机或信号装置。

KTO 011: Thermostat (normally closed),contact breaker for regulating heaters.
KTS 011: Thermostat(normally open), contact maker for regulating of filter fans and heat exchangers or for switching signal devised when temperature limit has been exceeded.

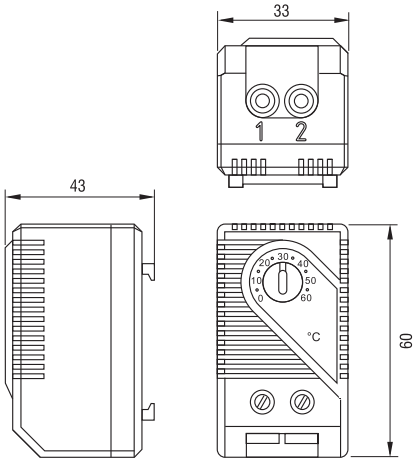

技术参数 Technical Data

开关温差Switch temperature difference	7K (± 4K tolerance)
传感元件Sensor element	感温材料thermostatic bimetal
触点类型Contact type	快速动作接点snap–action contact
触点电阻Contact resistance	< 10mΩ
使用寿命Service life	> 100,000 cycles
开关最大容量 Max. Switching capacity	250VAC, 10 (2) A 120VAC, 15 (2) A DC 30W
EMC	acc. to EN 55014–1–2, EN 61000–3–2, EN 61000–3–3
接线方式Connection	2极接线端子2.5mm²导线 2-pole terminal,clamping torque 0.5Nm max.:rigid wire 2.5mm² stranded wire (with wire end ferrule) 1.5mm²
安装方式Mounting	35mm DIN轨道 clip for 35mm DIN rail,EN60715 or for exit filter EF 118 Series
外壳材料Casing	塑料UL94标准V-0防火等级, plastic according to UL94 V-0, light grey
外观尺寸Dimensions	60 x 33 x 43mm
重量Weight	约40克approx. 40g
安装位置Fitting position	任意variable
操作/储存温度Operating/Storage temperature	–20 to+80℃(–4 to +176°F) /–45 to+80℃(–49 to +176°F)
防护等级Protection type	IP20

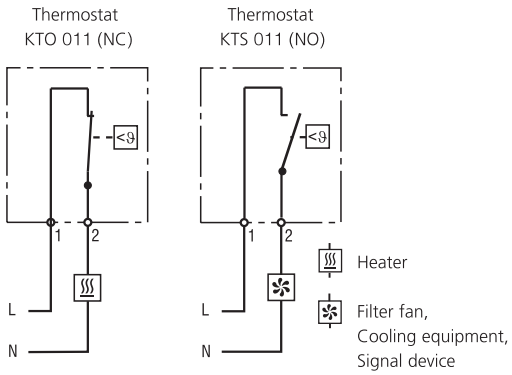

接线示意图 Example of connection

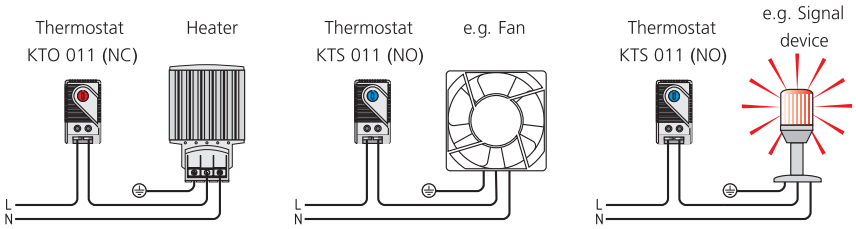

接线示意图 Example of connection

设定范围 Setting range	订货代码 Art. No. Contact Breaker (NC)	订货代码 Art. No. Contact Breaker (NC)	产品证书 Approvals
0 to +60℃	01140.0-00	01141.0-00	CE
-10 to +50℃	01142.0-00	01143.0-00	CE
+20 to +80℃	01159.0-00	01158.0-00	CE
+32 to +140℉	01140.9-00	01141.9-00	CE
+14 to +122℉	01142.9-00	01143.9-00	CE
0 to +60℃	01146.9-00	01147.9-00	CE

ZR 011

产品特性 Features

- 常开常闭一体化设计NO and NC in one casing
- 温度独立控制Separate adjustable temperatures
- 灵敏度高High switching capacity
- 易操作Terminals easily accessible
- 导轨安装Clip fixing

加热散热两用型温控器；常闭用于调控加热器；常开用于调控风机或开关信号装置。

Two thermostats in one casing:
Thermostat (contact breaker, normally closed) for regulating heaters.
Thermostat (contact maker, normally open) for regulating filter fans and heat exchangers or switching signal devices when temperature limit has been exceeded. Heaters and cooling equipment can be switched independently from each other with a temperature offset as opposed to the usual change-over contacts.

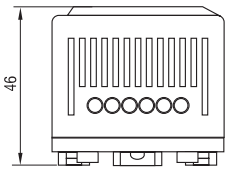

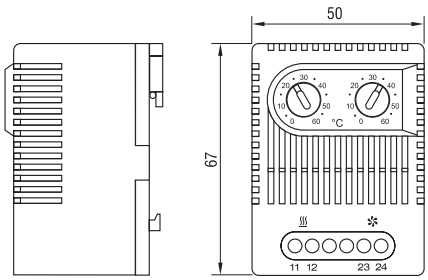

技术参数 Technical Data

开关温差Switch temperature difference	7K (±4K tolerance)
传感元件Sensor element	感温材料thermostatic bimetal
触点类型Contact type	快速动作接点snap–action contact
触点电阻Contact resistance	< 10mΩ
使用寿命Service life	> 100,000 cycles
开关最大容量 Max. Switching capacity	250VAC, 10 (2) A 120VAC, 15 (2) A DC 30W
EMC	acc. to EN 55014–1–2, EN 61000–3–2, EN 61000–3–3
接线方式Connection	4极接线端子2.5mm²导线 4–pole terminal,clamping torque 0.5Nm max.:rigid wire 2.5mm² stranded wire (with wire end ferrule) 1.5mm²
安装方式Mounting	35mm DIN轨道 clip for 35mm DIN rail,EN60715 or for exit filter EF 118 Series
外壳材料Casing	塑料UL94标准V-0防火等级, plastic according to UL94 V-0, light grey
外观尺寸Dimensions	67 x 50 x 46mm
重量Weight	approx. 90g
安装位置Installation position	任意variable
操作/储存温度Operating/Storage temperature	–20 to+80℃(–4 to +176°F) /–45 to+80℃(–49 to +176°F)
防护等级Protection type	IP20

Thermostat
ZR 011 (NC/NO)

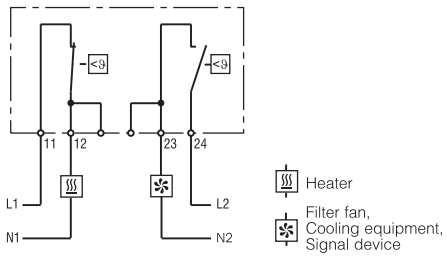

接线示意图 Example of connection

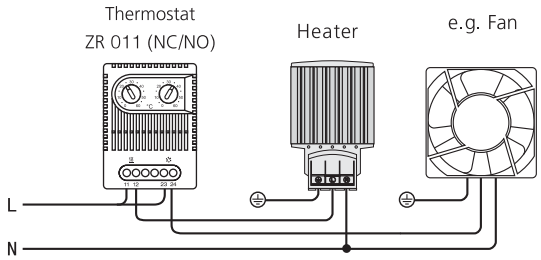

接线示意图 Example of connection

订货代码 Art. No.	设定范围 Setting range		设定范围 Setting range	
01172.0-00	contact breaker, normally closed	0 to +60℃	contact maker, normally open	0 to +60℃
01172.0-01	contact breaker, normally closed	+32 to +140°F	contact maker, normally open	+32 to +140°F
01175.0-00	contact breaker, normally closed	–10 to +50℃	contact maker, normally open	+20 to +80℃
01175.0-01	contact breaker, normally closed	+14 to +122°F	contact maker, normally open	+68 to +176°F
01176.0-00*	contact maker, normally open	0 to +60℃	contact maker, normally open	0 to +60℃
01176.0-01*	contact maker, normally open	+32 to +140°F	contact maker, normally open	+32 to +140°F

FZK MECHANICAL THERMOSTAT
机械式温控器

FZK 021

产品特性 Features

- 可调节温度Adjustable temperature
- 高分断能力High switching capacity
- 低磁滞后Small hysteresis
- 端子易接入Terminals easily accessible
- 导轨安装Clip fixing
- 转换接点Change–over contact

机械式恒温器是用于控制加热器和冷风机或信号装置。

The mechanical thermostat is used for controlling heating and cooling equipment, filter fans or signal devices. The thermostat registers the surrounding air and can switch both inductive and resistive loads via snap-action contact.

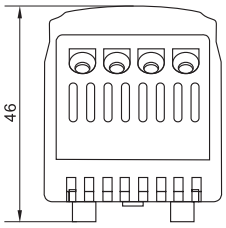

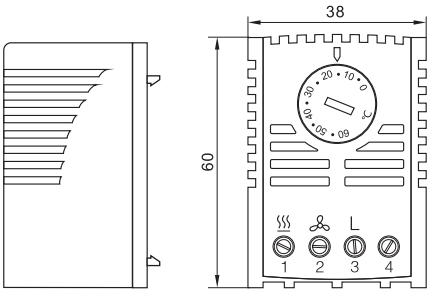

技术参数 Technical Data

开关温差Switch temperature difference	4K (±1.5K tolerance)
传感元件Sensor element	感温材料Thermostatic bimetal
触点类型Contact type	快速动作接点Snap–action contact
触点电阻Contact resistance	< 10mΩ
使用寿命Service life	> 100,000 cycles
开关最大容量 Max. Switching capacity	250VAC, 10 (4) A 120VAC, 10 (4) A DC 30W
最大开关容量NC Max. Switching capacity, NC	250VAC, 5 (2) A 120VAC, 5 (2) A DC 30W
EMC	Acc. To EN 55014–1–2, EN 61000–3–2, EN 61000–3–3
接线方式Connection	4极接线端子2.5mm²导线 4–pole terminal,clamping torque 0.5Nm max.:rigid wire 2.5mm² stranded wire (with wire end ferrule) 1.5mm²
安装方式Mounting	35mm DIN轨道 clip for 35mm DIN rail,EN60715 or for exit filter EF 118 Series
外壳材料Casing	塑料UL94标准V-0防火等级, plastic according to UL94 V-0, light grey
外观尺寸Dimensions	67 x 50 x 38mm
重量Weight	Approx. 0.10kg
安装方式Fitting position	任意variable
操作/储存温度Operating/Storage temperature	-20 to +80℃ (-4 to +176°F) / –45 to +80℃ (–49 to +176°F)
防护等级Protection type	IP20

*连接端子N(RF加热电阻器)可反馈热量信号，从而减少温差大约0.5K。

*Connecting terminal "N" (RF heating resistor) causes the thermal feedback to work and so reduces the switch temperature difference to approx. 0.5K.

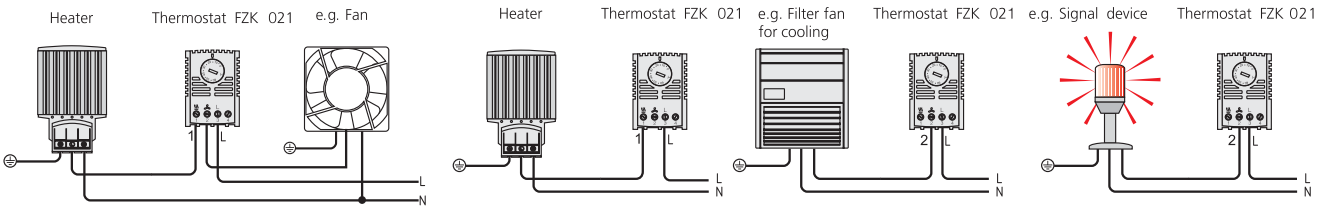

接线示意图 Example of connection

订货代码 Art. No.	操作电压 Operating voltage	设定范围 Setting range
01170.0-00	230VAC	+5 to +60℃
01170.0-01	230VAC	+40 to +140°F
01170.0-02	230VAC	–20 to +30℃
01170.9-00	120VAC	+40 to +140°F
01170.9-01	120VAC	+5 to +60°F

ETR 011

产品特性 Features

- 可调节温度Adjustable temperature
- LED显示Optical operating display (LED)
- 高分断能力High switching capacity
- 导轨安装Clip fixing

电子式温度传感器能根据环境温度来控制加热器的打开与关闭。

Electronic temperature sensors can control the on & off of heater according to the ambient temperature.

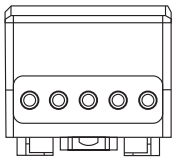

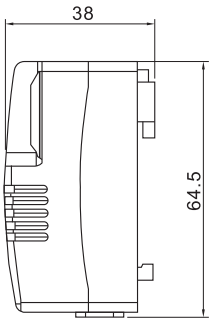

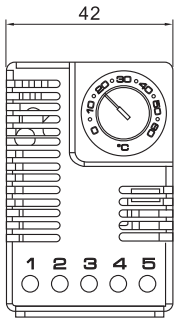

技术参数 Technical Data

开关温差Switch temperature difference	2K (± 1K tolerance)at 25℃/77° F (50% RH)
反应时间Reaction time (humidity)	approx. 5 sec.
触点类型Contact type	转换触点change–over contact (relay)
触点电阻Contact resistance	< 10mΩ
使用寿命 Service life	NC: > 50,000 cycles NO: > 100,000 cycles
最大开关容量 Max. Switching capacity (Relay output)	NC: 240VAC, 6 (1) A NO: 240VAC, 8 (1.6) A NC: 120VAC, 6 (1) A NO: 120VAC, 8 (1.6) A 24VDC, 4A
EMC	acc. to EN 55014–1–2, EN 61000–3–2, EN 61000–3–3
指示灯Optical indicator	LED
接线方式Connection	5极接线端子2.5mm²导线 5-pole terminal,clamping torque 0.5Nm max.:rigid wire 2.5mm² stranded wire (with wire end ferrule) 1.5mm²
安装方式Mounting	35mm DIN轨道 clip for 35mm DIN rail,EN6075 or for exit filter EF 118 Series
外壳材料Casing	塑料UL94标准V-0防火等级, plastic according to UL94 V-0, light grey
外观尺寸Dimensions	64.5 x 42 x 38mm
重量Weight	approx. 70g
安装位置Installation position	任意vertical
操作/储存温度Operating/Storage temperature	0 to +60℃ (+32 to +140° F) / –20 to +80℃ (–4 to +176° F)
防护等级Protection type	IP20

Connection diagram

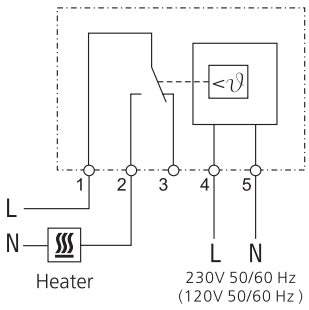

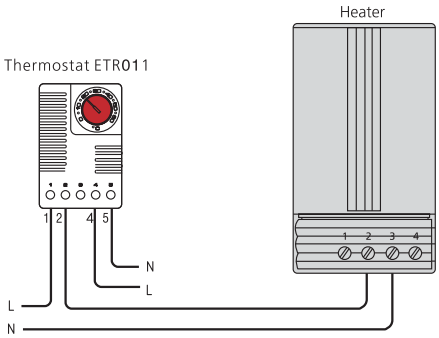

接线示意图 Example of connection

订货代码 Art. No.	操作电压 Operating voltage	温度设定范围 Setting range temperature	湿度设定范围 Setting range humidity
01131.0-00	230VAC, 50/60Hz	-20 to +60 ℃	CSA-US (VDE submitted)
01131.9-00	120VAC, 50/60Hz	–4 to +140 ° F	140°F CSA-US

FTO FTS MECHANICAL THERMOSTAT
机械式温控器

FTS 011(NO)

FTO 011(NC)

FTO 011/FTS 011

产品特性 Features

- 体积小Small size
- 固定温度设置Default temperature settings
- 防止篡改温度
- 安装简易Easy to install

FTO 011温度固定式温控器

当温度下降到某一固定值时，FTO 011可启动加热器或开关信号装置。

Tamperproof (Pre-set) Thermostat FTO 011

Contact breaker / NC (red casing) for regulating heaters or for switching signal devices when temperature has fallen below the minimum value. The contact opens when temperature is rising.

FTS 011固定温度式温控器

当温度下降到某一固定值时，FTS 011可启动风机制冷装置。

Tamperproof (Pre-set) Thermostat FTS 011

Contact maker / NO (blue casing) for regulating filter fans, heat exchangers, cooling devices or for switching signal devices when temperature limit has been exceeded. The contact closes when temperaure is rising.

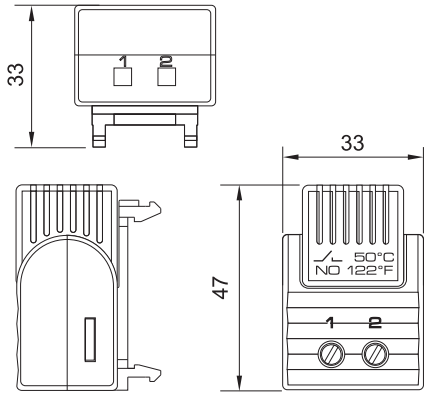

FTS 011(NO) Thermostats

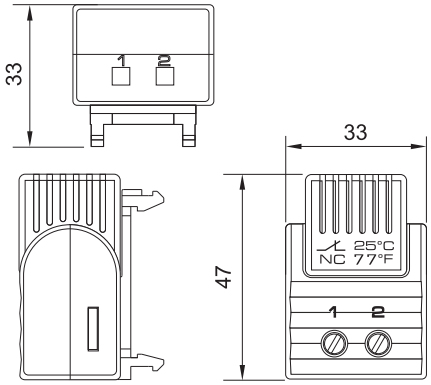

FTO 011(NC) Thermostats

技术参数 Technical Data

传感元件Sensor element	感温材料thermostatic bimetal
触点类型Contact type	快速动作接点snap-action contact
触点电阻Contact resistance	< 20mΩ
使用寿命Service life	> 100,000 cycles
开关最大容量 Max. Switching capacity	250V AC, 5 (1.6)A 120V AC, 10 (2)A DC 30W
开关最大电流Max. inrush current	AC 10A
EMC	acc. to EN 55014-1-2, EN 61000-3-2, EN 61000-3-3
接线方式Connection	2极接线端子,2.5mm²导线 2-pole terminal for 2.5mm²,torque 0.8Nm max.
安装方式Mounting	35mm DIN轨道 clip for 35mm DIN rail,EN60715 or for exit filter EF 118 Series
外壳材料Casing	塑料UL94标准V-0防火等级, plastic according to UL94 V-0, light grey
外观尺寸Dimensions	47 x 33 x 33mm
重量Weight	approx. 23g
安装位置Installation position	任意variable
操作/储存温度Operating/Storage temperature	-20 to+80℃(-4 to +176°F) /-45 to+80℃(-49 to +176°F)
防护等级Protection type	IP20

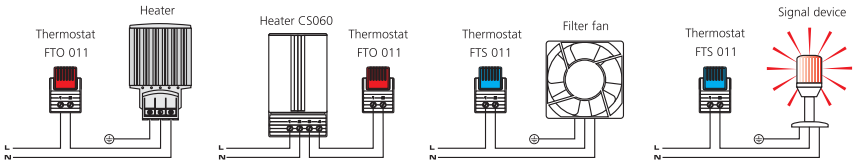

接线示意图 Example of connection

订货代码 Art. No.	触点类型 Contact	关闭温度 Switch-off temperature	关闭温度 Switch-off temperature
01160.0-00	Contact breaker (NC)	+15℃ / +59°F (± 5K tolerance)	+5℃ / +41°F (± 5K tolerance)
01160.0-01	Contact breaker (NC)	+25℃ / +77°F (± 5K tolerance)	+15℃ / +59°F (± 5K tolerance)
		开启温度Switch-on temperature	开启温度Switch-on temperature
01161.0-00	Contact maker (NO)	+50℃ / +122°F (± 6K tolerance)	+40℃ / +104°F (± 7K tolerance)
01161.0-01	Contact maker (NO)	+60℃ / +140°F (± 6K tolerance)	+50℃ / +122°F (± 7K tolerance)
01161.0-02	Contact maker (NO)	+35℃ / +95°F (± 6K tolerance)	+25℃ / +77°F (± 7K tolerance)

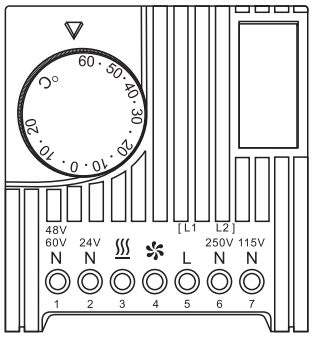

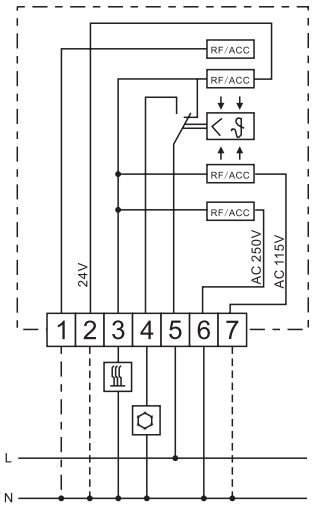

Thermostat
SK3110.000

接线示意图 Example of connection

SK3110.000

产品特性 Features

主要用于控制风机、加热器和转换器，也可以用于监控配电柜内的温度。

Especially used for controlling fan filter, heater and exchanger,also could be monitoring the electric cabinetinner temperature when working as signal arcuser.

参数说明 Parameter Clarification

◇温度调节范围：–20℃到+60℃

◇重量：105克

◇外观尺寸：70×70×33.5mm

◇使双金属传感器热灵敏度设置反馈热。

◇接触点方案：单开关接触点为瞬时开关组件

◇允许接触点荷载

◇Adjusting range:–20℃ to +60℃

◇Weight:105g

◇Size :70 × 70 × 33.5mm

◇Make bimetal sensor as heat sensitivity set to feedback of heat.

◇Contact point scheme: single switch over contact point as instant switch component

◇allowed load of contact point

KL5–3

AC10(4)A

DC=30W

KL5-4(冷却)(Cooling)

AC5(4)DA

DC=30W

（D）=在COS ϕ = 0.6敏感性负

◇开关误差 1K±0.8K

◇宽电压范围, 24V~230V

◇连接方便, 端子能够从外部用螺丝固定连接.

◇安装简单, 它能够垂直或水平安装在35mm导轨上.

◇Switch discrepancy"1K±0.8K

◇Voltage scope is wide, any type could be used from 24V to 230V

◇Time-saving connection, terminal block could be installed with screw from outside

◇Easy installation, it could be installed to 35mm din rail vertically or horizontally

FZK ELECTRONIC THERMOSTAT
电子式温控器

FZK 011

产品特性 Features

- 可调节温度Adjustable temperature
- 高分断能力High switching capacity
- 低磁滞后Small hysteresis
- 端子易接入Terminals easily accessible
- 导轨安装Clip fixing
- 转换接点Change-over contact

电子式恒温器是用于控制加热器和冷风机或信号装置。

The electronic thermostat is used for controlling heating and cooling equipment, filter fans or signal devices. The thermostat registers the surrounding air and can switch both inductive and resistive loads via snap-action contact.

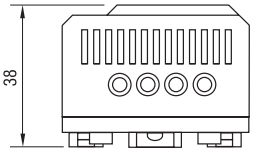

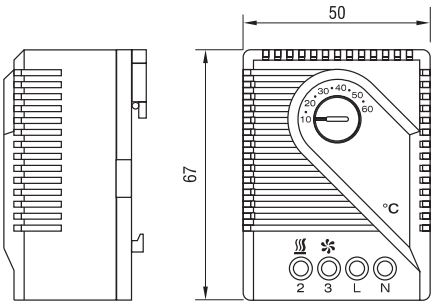

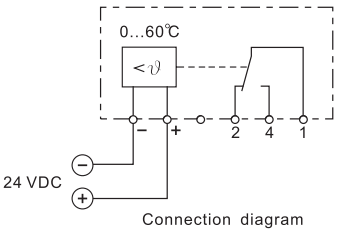

Connection diagram

技术参数 Technical Data

开关温差Switch temperature difference	4K (± 1.5K tolerance)
传感元件Sensor element	感温材料Thermostatic bimetal
触点类型Contact type	快速动作接点snap–action contact
触点电阻Contact resistance	< 10mΩ
使用寿命Service life	> 100,000 cycles
开关最大容量 Max. Switching capacity	250VAC, 10 (4) A 120VAC, 10 (4) A DC 30W
最大开关容量NC Max. Switching capacity, NC	250VAC, 5 (2) A 120VAC, 5 (2) A DC 30W
EMC	Acc. To EN 55014–1–2, EN 61000–3–2, EN 61000–3–3
接线方式Connection	4极接线端子2.5mm²导线 4–pole terminal,clamping torque 0.5Nm max.:rigid wire 2.5mm² stranded wire (with wire end ferrule) 1.5mm²
安装方式Mounting	35mm DIN轨道 clip for 35mm DIN rail,EN60715 or for exit filter EF 118 Series
外壳材料Casing	塑料UL94标准V-0防火等级, plastic according to UL94 V-0, light grey
外观尺寸Dimensions	67 x 50 x 38mm
重量Weight	Approx. 0.10kg
安装位置Installation position	任意variable
操作/储存温度Operating/Storage temperature	–20 to +80℃ (–4 to +176°F) / –45 to +80℃ (–49 to +176°F)
防护等级Protection type	IP20

*连接端子N(RF加热电阻器)可反馈热量信号，从而减少温差大约0.5K。

*Connecting terminal "N" (RF heating resistor) causes the thermal feedback to work and so reduces the switch temperature difference to approx. 0.5K.

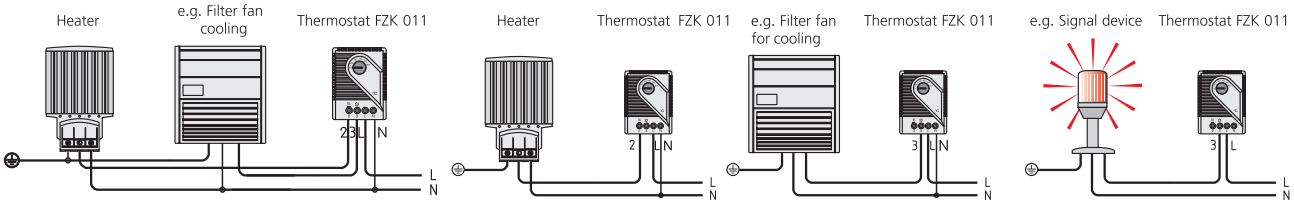

接线示意图 Example of connection

订货代码 Art. No.	操作电压 Operating voltage	设定范围 Setting range
01170.0-00	230VAC	+5 to +60℃
01170.0-01	230VAC	+40 to +140°F
01170.0-02	230VAC	–20 to +30℃
01170.9-00	120VAC	+40 to +140°F
01170.9-01	120VAC	+5 to +60°F

ET 011 24VDC

产品特性 Features

- 高直流分断能力High DC breaking capacity
- 低滞后Low hysteresis
- 可调整温度Adjustable temperature
- 切换接点Change-over contact
- 导轨安装Clip fixing

直流24V高性能电子温控器，可以调控加热器散热以及信号装置。与机械式温控器相比,ET011有低滞后性，使切换点和设置精度更加精确。

Electronic thermostat for regulating high performance DC 24V equipment. Heating or cooling appliances as well as signal devices can be switched via the potential free change-over contact. In comparison to mechanical thermostats, the ET 011 has a low hysteresis making the switching point and setting accuracy more precise.

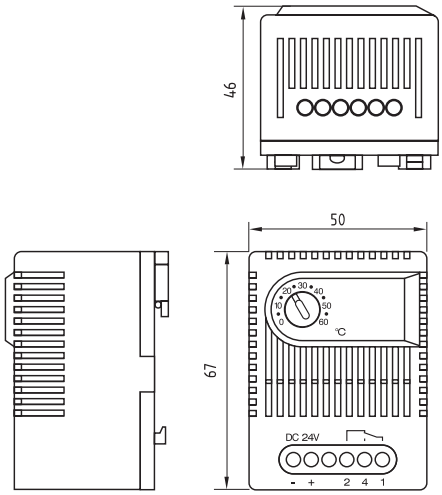

技术参数 Technical Data

开关温差Switch temperature difference	Approx. 3K
传感器元件Sensor element	PTC
触点类型Contact type	切换型Change-over
触点电阻Contact resistance	< 10mΩ
使用寿命Service life	> 100,000 cycles
最大开关容量Max. switching capacity	28VDC, 16A
EMC	Acc. To EN 55014-1-2, EN 61000-3-2, EN 61000-3-3
接线方式Connection	5极接线端子2.5mm²导线 5-pole terminal,clamping torque 0.5Nm max.:rigid wire 2.5mm² stranded wire (with wire end ferrule) 1.5mm²
安装方式Mounting	35mm DIN轨道 clip for 35mm DIN rail,EN60715 or for exit filter EF 118 Series
外壳材料Casing	塑料UL94标准V-0防火等级, plastic according to UL94 V-0, light grey
外观尺寸Dimensions	67 x 50 x 46mm
重量Weight	Approx. 80g
安装位置Installation position	任意variable
操作/储存温度Operating/Storage temperature	0 to +60℃ (32 to +140°F) / -45 to +80℃ (-49 to +176°F)
防护等级Protection type	IP20

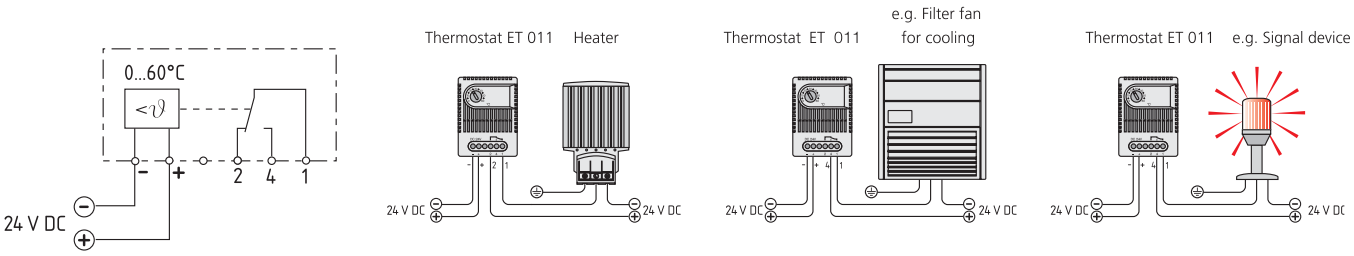

接线示意图 Example of connection

订货代码 Art. No.	操作电压 Operating voltage	温度设定范围 Setting range
01190.0-00	24VDC (20-28VDC)	0 to +60℃

ETF ELECTRONIC HYGROTHERMOSTAT
电子式温湿度控制器

ETF 012

产品特性 Features

- 温度和湿度都可调节Temperature and humidity adjustable
- LED显示Optical operating display (LED)
- 高分断能力High switching capacity
- 导轨安装Clip fixing

电子式温湿度传感器能根据环境温度与相对湿度来控制加热器和风机的打开与关闭。

Electronic temperature and humidity sensor can control the on & off of the heater and fan according to ambient temperature and relative humidity.

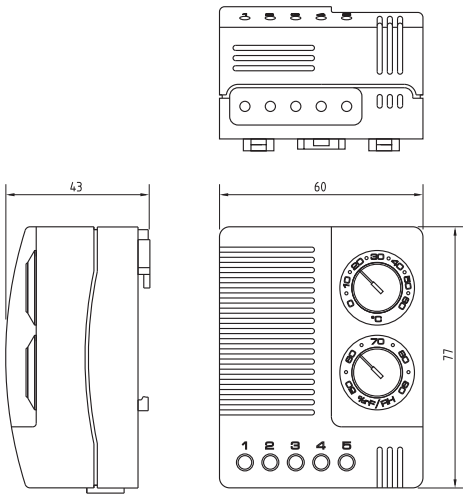

技术参数 Technical Data

开关温差Switch temperature difference	2K (± 1K tolerance)at 25℃/77° F (50% RH)
开关湿度差Switch difference(humidity)	4% RH (± 1% tolerance) at 25℃ /77° F (50% RH)
反应时间Reaction time (humidity)	approx. 5 sec.
触点类型Contact type	转换触点change–over contact (relay)
触点电阻Contact resistance	< 10mΩ
使用寿命 Service life	NC: > 50,000 cycles NO: > 100,000 cycles
最大开关容量 Max. Switching capacity (Relay output)	NC: 240VAC, 6 (1) A NO: 240VAC, 8 (1.6) A NC: 120VAC, 6 (1) A NO: 120VAC, 8 (1.6) A 24VDC, 4A
EMC	acc. to EN 55014–1–2, EN 61000–3–2, EN 61000–3–3
指示灯Optical indicator	LED
接线方式Connection	5极接线端子2.5mm²导线 5-pole terminal,clamping torque 0.5Nm max.:rigid wire 2.5mm² stranded wire (with wire end ferrule) 1.5mm²
安装方式Mounting	35mm DIN轨道 clip for 35mm DIN rail,EN6075 or for exit filter EF 118 Series
外壳材料Casing	塑料UL94标准V-0防火等级, plastic according to UL94 V-0, light grey
外观尺寸Dimensions	77 x 60 x 43mm
重量Weight	approx. 0.20kg
安装位置Installation position	任意vertical
操作/储存温度Operating/Storage temperature	0 to +60℃ (+32 to +140° F) / –20 to +80℃ (–4 to +176° F)
防护等级Protection type	IP20

Connection diagram

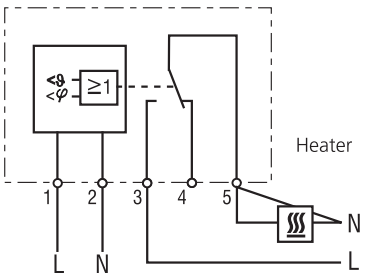

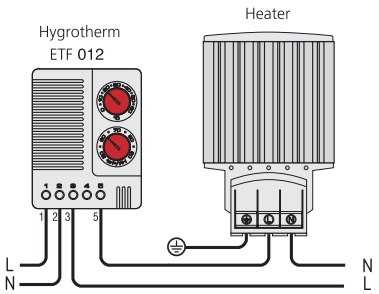

接线示意图 Example of connection

订货代码 Art. No.	操作电压 Operating voltage	温度设定范围 Setting range temperature	湿度设定范围 Setting range humidity
01230.0-00	230VAC, 50/60Hz	0 to +60 ℃	50 to 90% RH
01230.9-00	120VAC, 50/60Hz	+32 to +140 ° F	50 to 90% RH
01230.9-01	120VAC, 50/60Hz	0 to +60℃	50 to 90% RH

EFR 012

产品特性 Features

- 高分断能力High switching capacity
- 灵敏度高High switching capacity
- 可调节湿度Adjustable humidity
- 切换接点Change–over contact
- 导轨安装Clip fixing

当配电箱内相对湿度超出65%时，EFR012可控制加热器加热，以减少水份凝结和有效防止腐蚀。与机械式温控器相比，EFR012有低滞后性，使切换点和设置精度更加精确。

When the relative humidity in the power distribution box exceeds 65%, EFR012 will control the heater heating, in order to reduce the moisture condensation and effectively prevent corrosion. Compared with mechanical thermostat, EFR012 with low hysteresis, making it's switching point and setting accuracy more precise.

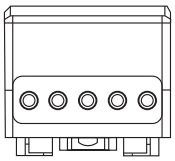

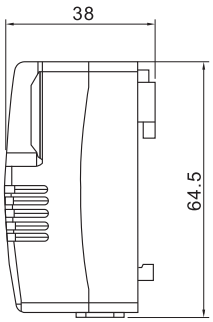

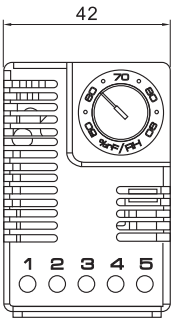

技术参数 Technical Data

开关湿差Switch temperature difference	5% RH(±3% RH tolerance)at 25℃
传感器元件Sensor element	PTC
触点类型Contact type	切换型Change–over
触点电阻Contact resistance	< 10mΩ
使用寿命Service life	> 100,000 cycles
最大开关容量Max. switching capacity	28VDC, 16A
EMC	Acc. To EN 55014–1–2, EN 61000–3–2, EN 61000–3–3
接线方式Connection	5极接线端子2.5mm²导线 5–pole terminal,clamping torque 0.5Nm max.:rigid wire 2.5mm² stranded wire (with wire end ferrule) 1.5mm²
安装方式Mounting	35mm DIN轨道 clip for 35mm DIN rail,EN60715 or for exit filter EF 118 Series
外壳材料Casing	塑料UL94标准V-0防火等级, plastic according to UL94 V-0, light grey
外观尺寸Dimensions	64.5 x 42 x 38mm
重量Weight	Approx. 80g
安装位置Installation position	任意variable
操作/储存温度Operating/Storage temperature	0 to +60℃ (32 to +140°F) / –45 to +80℃ (–49 to +176°F)
防护等级Protection type	IP20

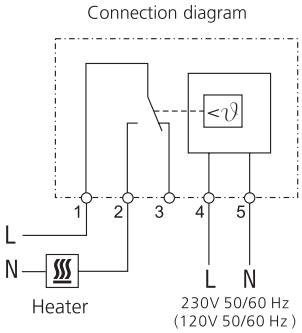

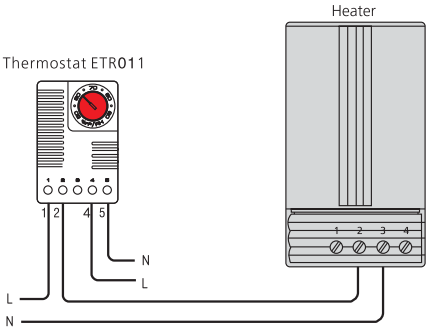

接线示意图 Example of connection

订货代码 Art. No.	操作电压 Operating voltage	湿度设定范围 Setting range humidity
01245.0-00	230VAC, 50/60Hz	40 to 90% RH VDE + UL intended
01246.0-00	230VAC, 50/60Hz	65% RH pre-set VDE + UL intended
01245.9-00	120VAC, 50/60Hz	40 to 90% RH UL intended
01246.9-00	120VAC, 50/60Hz	65% RH pre-set UL intended

MFR MECHANICAL HYGROSTAT
机械式湿度控制器

MFR 012

产品特性 Features

- 相对湿度调节Adjustable relative humidity
- 转换触点Change–over contact
- 灵敏度高High switching capacity
- 易操作Easily accessible terminals
- 导轨安装Clip fixing

当配电箱内相对湿度超出65%时，MFR012可控制加热器加热，以减少水份凝结和有效防止腐蚀。

The electromechanical hygrostat MFR 012 is designed to control enclosure heaters so that the dew point is raised when a critical relative humidity of 65% is exceeded. In this way condensation and corrosion is effectively prevented.

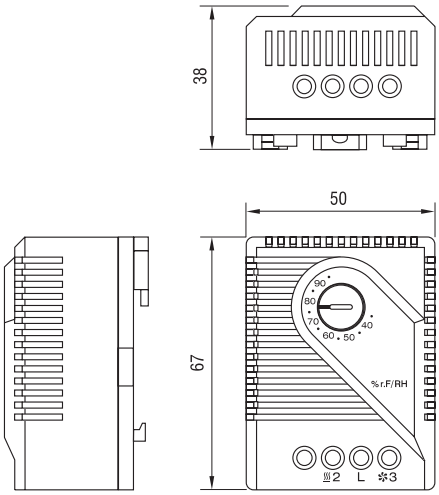

技术参数 Technical Data

开关湿度差Switch difference	4% RH (± 3% tolerance)
气流速度Permissible air velocity	15m/sec
触点类型Contact type	转换触点change–over contact
触点电阻Contact resistance	< 10mΩ
使用寿命Service life	> 100,000 cycles
开关最小容量Min.Switching capacity	20V AC/DC, 100mA
开关最大容量 Max. Switching capacity	250VAC, 5 (1) A DC 20W
EMC	acc. to EN 55014–1–2, EN 61000–3–2, EN 61000–3–3
接线方式Connection	3极接线端子2.5mm²导线 3-pole terminal,clamping torque 0.5Nm max.:rigid wire 2.5mm² stranded wire (with wire end ferrule) 1.5mm²
安装方式Mounting	35mm DIN轨道 clip for 35mm DIN rail,EN60715 or for exit filter EF 118 Series
外壳材料Casing	塑料UL94标准V-0防火等级, plastic according to UL94 V-0, light grey
安装尺寸Dimensions	67 x 50 x 38mm
重量Weight	approx. 60g
安装位置Installation position	任意variable
操作/储存温度Operating/Storage temperature	–20 to+80℃(–4 to +176°F) /–45 to+80℃(–49 to +176°F)
防护等级Protection type	IP20

*at 50% RH

Connection diagram

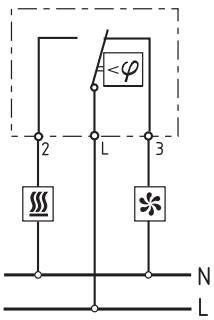

Enclosure heater

Filter fan, Cooling equipment, Signal device

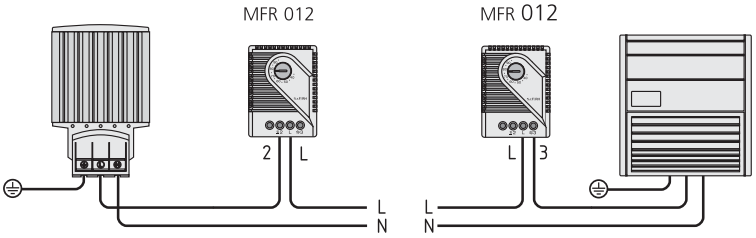

接线示意图 Example of connection

订货代码 Art. No.	湿度设定范围 Setting range
01220.0-00	35 to 95% RH

REX 011 15℃, 25℃

产品特性 Features

- 紧凑型设计Compact design
- 可设置温度Set temperature
- 高分断能力High switching capacity

小型机械式防爆温控器用于调节温度和控制热量。例如在传送装备中,控制面板和测量仪器被放置在防爆区域。这种特殊的监控器体积小,温度精度高(误差小)、寿命长,可直接控制加热器。

Compact small mechanical thermostat for temperature regulation and monitoring of heaters, for example in transmitter cabinets, control panels and measuring equipment which are deployed in areas with explosion hazard. The special switch construction enables high response accuracy, small switch temperature difference and a very long service life. High switching performance allows direct control of the heaters.

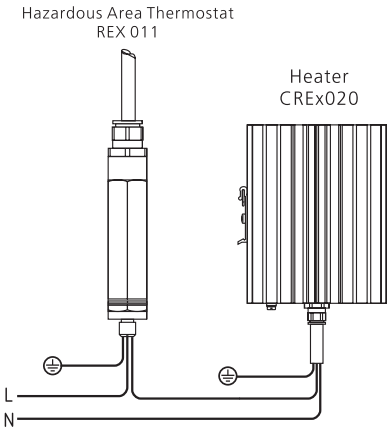

接线示意图 Example of connection

技术参数 Technical Data

Explosion proof according to EN	LCIE (Laboratoire Central des Industries Electriques)
符合的认证Conformity certificate	01 ATEX 6074/02, LCIE N° 06 ATEX Q8011, IECEx LCI 07. 0021
传感器元件Sensor element	感温材料thermostatic bimetal
触点方式(1P)Contact type (1–pole)	打开控制温度上升opens with rising temperature
使用寿命Service life	> 100,000 cycles
最大开关容量Max. Switching capacity	250VAC, 4 (1) A
接线方式Connection	Si HF – JZ 3 x 0.75mm² length 1m
安装方式Mounting	安装支架带M8螺母mounting bracket with nut M8 (see illustration)
外壳材料Casing	铝aluminium, black anodised
外观尺寸Dimensions	length 110mm
重量Weight	approx. 0.20kg
安装位置Installation position	任选variable
操作/储存环境Operating/Storage temperature	–20 to +40℃ (–4 to +104°F)/–45 to +70℃ (–49 to +158°F)
防护等级Protection type/Protection class	IP65 / I (earthed)

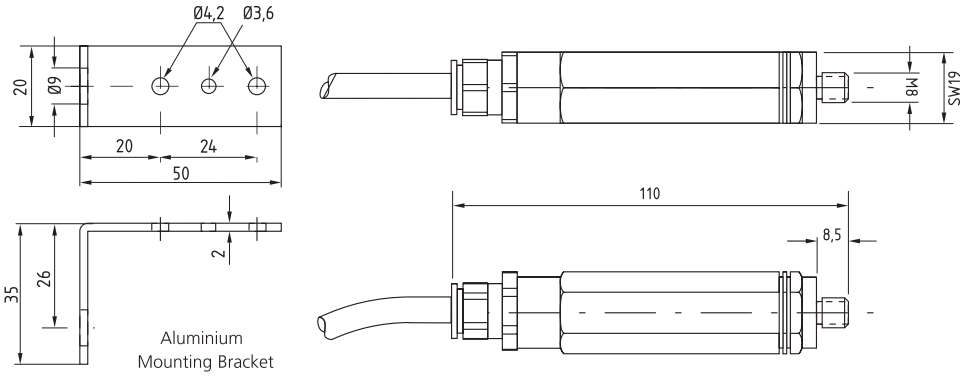

接线示意图 Example of connection

订货代码	Ex保护等级	开关温度	开启温度差
Art. No.	Ex protection type	Switch–off temperature	Switch temperature difference
01180.0–00	d IIC T6 - Ex tD A21 IP6X T85℃	+15℃(± 4K tolerance)	4K (± 1K tolerance)
01181.0–00	d IIC T6 - Ex tD A21 IP6X T85℃	+25℃(± 4K tolerance)	4K (± 1K tolerance)

LC
LCF

AIRFLOW MONITOR
风感器

LC 013/LCF 013

产品特性 Features

- 机械式开关触点Mechanical switch contact
- 应用广泛Versatile fields of application
- 体积小Small size
- 易安装Easy to connect

风感器是用于指示风机或过滤器的风量损失。
Air flow sensor is used to indicate the air loss of a fan or fan filter.

技术参数 Technical Data

触点类型Contact type	磁触点Reed / magnet contact
常闭Normally Closed (NC)	空气流动时开关触点打开Switch contact open when air is flowing
常开Normally Open (NO)	空气流动时开关触点关闭Switch contact closed when air is flowing
最大开关电压Max. switching voltage	NC: 240VDC (UL), 240V AC/DC (VDE) / NO: 60VDC
最大开关电流Max. switching current	NC: DC 500mA / NO: DC 170mA
最大切换容量Max. switching capacity	10W (电阻负载resistive load)
风速开关切换值 Switching threshold of airflow velocity	> 2.5m/s (hysteresis: > 1m/s)
最大风速Max. airflow velocity	50m/s
触点电阻Contact resistance	< 370mΩ (with wire)
最大空气湿度Max. air humidity	70% RH (not precipitating)
使用寿命Service life	> 100,000 cycles
接线方式Connection	2条AWG26电线长度500mm，NC为黑线，NO为蓝线 2 x single strand AWG 26, length 500mm, tip of stranded wire 5mm stripped and tinned (NC: black, NO: blue)
安装方式Mounting	卡入式 alternatively integrated in protective grille (see table), mounting clamp or mounting clip
外壳材料Casing	塑料UL94-HB黑色plastic according to UL94-HB, black
安装位置Installation position	卡入风机网罩内bidirectional tab perpendicular to airflow
操作/储存温度Operating/Storage temperature	-20 to +50℃ (-4 to +122°F) / -20 to +80℃ (-4 to +176°F)
防护等级Protection type	IP20

风感器配有保护罩
Airflow monitor integrated in protective grille

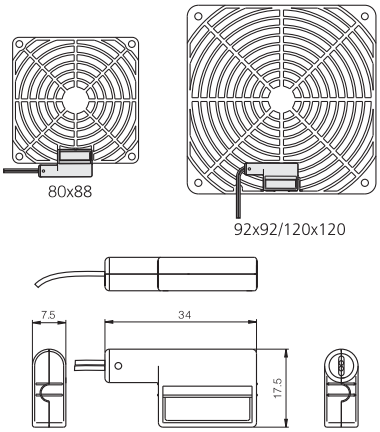

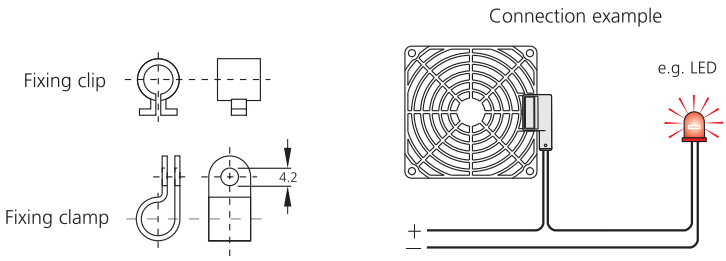

接线示意图 Example of connection

描述 Description	订货代码 Art. No.	订货代码 Art. No.	尺寸 Dimensions	重量 Weight(approx.)
Airflow monitor with mounting clamp and mounting clip LC 013	01300.0-00	01300.1-00	34 x 17.5 x 7.5mm	5g
Airflow monitor integrated in protective grille (plastic) LCF 013	01301.0-00	01301.1-00	80 x 88 x 10.5mm	20g
	01302.0-00	01302.1-00	92 x 92 x 10mm	20g
	01303.0-00	01303.1-00	120 x 120 x 10mm	30g

配件

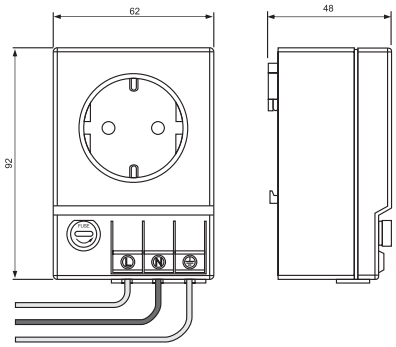

Connections from mains

SD 035

产品特性 Features

- 快速连接Quickly connected
- 可带或不带保险丝Available with or without fuse
- 固定夹Clip fixing

导轨安装的电源插座，可以快速安装和连接到配电箱，允许使用辅助产品，如手提灯，测量装置，电烙铁等。该产品适合带保险丝及不带保险丝使用。符合大部分国家及地区插座标准。

The DIN rail mounted electrical socket can be quickly fitted and connected inenclosures allowing the use of auxiliary products such as hand lamps, measuring devices, soldering irons etc. The unit is available with and without fuse and in manyworld sockel standards.

技术参数 Technical Data

连接Connection	3 x 压力钳夹刚性导线0.5-2.5mm^2 3 x pressure clamps for stranded and rigid wire 0 5-2 5mm^2
安装Mounting	夹为35mm的导轨，EN 60715 clip for 35mm DIN rail，EN 60715
套管Casing	塑料依据Plastic according to UL94 v-O，浅灰色light grey
尺寸Dimensions	92x62x48mm
重量Weight	大约 approx.0.2kg
安装方式Fitting position	可变的 variable
工作/储存温度 Operating/Storage temperature	-45 to+70° C(-49 to+158° F)
工作/储存湿度 Operating/Storage humidity	最大90%RH(非冷凝) Max 90%RH(non—condensing)
保护类型/防护等级 Protection type/Protection clas	IP20 / I(earhed)

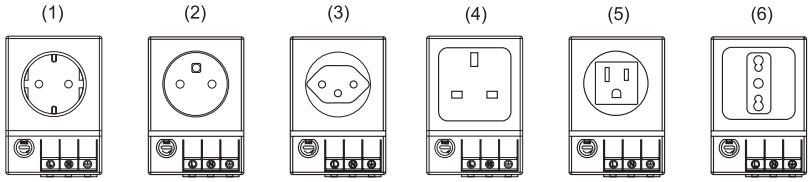

订货代码 Art. No.	操作电压 Operating voltage	插座 Socket	模式 Model	额定电流 Nominal Current
03500.0-00	250VAC	Germany/Russia(1)	with fuse* 带熔丝	6.3A
03500.0-01	250VAC	Germany/Russia(1)	without fuse 不带熔丝	16.0A
03501.0-00	250VAC	F/PL/CZ/SK(2)	with fuse* 带熔丝	6.3A
03501.0-01	250VAC	F/PL/CZ/SK(2)	without fuse 不带熔丝	16.0A
03502.0-00	250VAC	Switzerland(3)	with fuse* 带熔丝	6.3A
03502.0-01	250VAC	Switzerland(3)	without fuse 不带熔丝	10.0A
03503.0-00	250VAC	UK/Ireland(4)	with fuse* 带熔丝	6.3A
03503.0-01	250VAC	UK/Ireland(4)	without fuse 不带熔丝	13.0A
03504.0-00	125VAC	USA/Canada(5)	with fuse* 带熔丝	6.3A
03504.0-01	125VAC	USA/Canada(5)	without fuse 不带熔丝	15.0A
03505.0-00	250VAC	taly(6)	with fuse* 带熔丝	6.3A
03505.0-01	250VAC	talyf(6)	without fuse 不带熔丝	16.0A

*fuse 熔丝 Φ5x20mm

DA PRESSURE COMPENSATION DEVICE
气密装置

DA084

Photo: Inside view

DA 084

产品特性 Features

- 高度保护High degree of protection
- 易于安装Easy to install

①该装置为电气配电柜，提供一个安全的有气密保护性的环境。

②密闭的箱子当中，因为昼夜交替时温度的变化而引起箱内气压变化。

③避免灰尘及湿气的吸入。

④DA084气压密装置允许气压在允许的范围内发生变化。

⑤因为气密装置有IP45高度保护能力，所以当我们把它安装在任何箱子里，都不会影响箱体的功能。

①It has become more and more important to provide a protected enclosure environment for valuable and crucial electrical and electronic components.

②In a tightly closed enclosure, pressure differentials can occur during extreme temperature variations, such as day/night operation.

③When this occurs, the risk of dust and humidity being absorbed into the control panel increases dramatically.

④The specially designed pressure compensation plug DA 084 permits a controlled change in pressure.

⑤It can be installed easily in any enclosure. Because of the pressure compensation plug's high degree of protection (IP45), the protection type of the enclosure will not be affected.

技术参数 Technical Data

安装方式Mounting	PG 29 thread with union nut
材料Material	Ul94标准的材料 V-0防火等级plastic according to UL94 V-0
与空气的接触面积Air interface	approx. 7cm²
外观尺寸Dimensions	Φ65.5 x 30.5mm
安装位置Installation position	任意variable
操作/储存温度Operating/Storage temperature	−45 to +70℃ (−49 to +158°F)

安装 Installation

在箱壁上开一个直径为37mm的孔，用螺丝钉把气密装置安装上去,请确保密封圈放在箱板的外侧，为了达到最佳密封效果，建议在箱子两侧各安装一个。

Make cut–out Φ37 $^{+1}$ mm in enclosure wall and mount pressure compensation device with nut. Please make sure that the sealing gasket is put in place on the outer side panel of the enclosure. For optimal pressure compensation we recommend to use two devices on opposite sides towards the top of the enclosure.

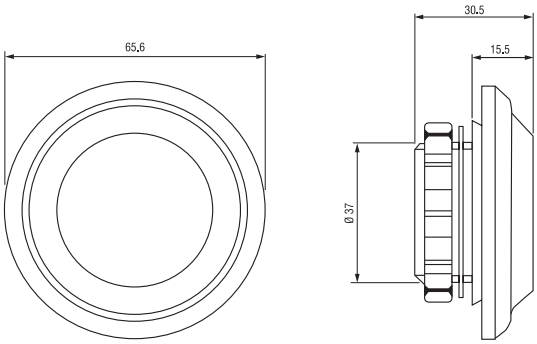

接线示意图 Example of connection

订货代码	型号	保护等级	包装	重量
Art. No.	Model	Protection type	Packing unit	Weight (approx.)
08400.0-00	without gasket	IP45	2 pieces	62g (31g/piece)
08400.0-04	with gasket	IP55	2 pieces	62g (31g/piece)

DA 284

产品特性 Features

- 高防护等级High degree of protection
- 防水膜Waterproof membrane
- 便于安装Easy to install

内部和外部的温度变化导致防护配电箱具有高度压力差。在负压或真空环境下，灰尘和湿气通过密封门进入配电箱。当外壳内的空气冷却下来，由于湿气无法逃出外壳，可能会出现冷凝。易于安装的压力补偿装置DA284在IP66防护等级下提供压力补偿。即使有轻微的过压，塞子里面的防水膜允许湿气排出而阻止水和灰尘进入外壳。

Pressure differentials in enclosures with a high degree of Protection are a result of internal and external temperature changes. In the case of negative pressure or partical vacuum. Dust and humiditv can enter the enclosure throuqh the door seal. When the air inside the enclosure cools down, condensation may occur because the humiditv cannot escape the enclosure. The easy-to-install pressure compensation device DA 284 Provides compensation of Pressure at a Protection degree of IP66. Even with a slight overpressure. a waterproof membrane inside the Plug allows the humidity to escape whilst blocking water and dirt from entering the enclosure.

技术参数 Technical Data

安装Mounting	M40X1.5螺母thread M40 x 1.5with nut
扭矩Torque	5Nm(最大.10Nm)5Nm(max.10Nm)
外壳深度Depth in enclosure	大约approx.16mm
材质Material	塑料，浅灰色plastic，light grey
密封Sealing	密封垫sealing gasket NBR
过滤器Filter	防水膜waterproof membrane
透气性 Air permeability	最小压力差1200l/h at a pressuredifference of min.70mbar
尺寸Dimensions	ϕ60 x 37mm
安装位置Fitting position	可变的 variable
工作/储存温度 Operating/Storage temperature	-35 to+70° C(-31 to+158° F)

安装 Installation

用ø40.5$^{+0.5}$mm的螺母将压力补偿装置安装在外壳上。请确保密封垫片放在外壳的外侧面板上适当的位置，为了获得最佳压力补偿，我们建议使用两个DA248D外壳顶部的两侧。

Make cut-out ø40 5 $^{+0.5}$ mm in enclosure wall and mount pressure compensation device with nut. Please make sure that the sealing gasket is put in place on the outer side panel of the enclosure. For optimal pressure compensation we recommend touse two devices on opposite sides towards the top of the enclosure.

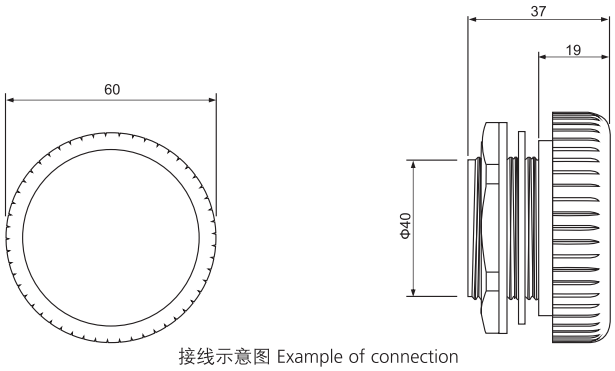

接线示意图 Example of connection

订货代码 Art. No.	保护等级 Protection type	包装 Packing unit	重量 Weight (approx.)
28400.0-00	IP66(EN 60529)/IPX9K(EN 40050-9)	2 pieces	90g(45g/piece)
28400.0-01	IP66(EN 60529)/IPX9K(EN 40050-9)	1 pieces	45g

SP-1000 MECHANICAL THERMOSTAT
机械式温控器

SP-1000

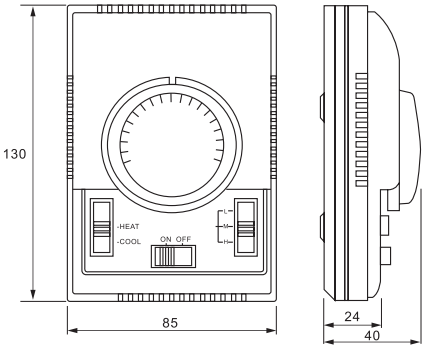

SP-1000

摘要 Summary

SP–1000温控器通常用于商业、工业和民用建筑，它能控制空调的风机线圈、水阀，使温度保持在设定的范围内。

SP-1000 series thermostats are usually used on the commercial, industrial and civil constructions, which can control the fan coil of air-conditioning,water valve and wind valvelet. It can make the temperature balance in the setting range in the location, and switches are manual witch, Very simple to manipulate.

特征 Characteristics

拨动按钮来设置温度：指示的那个地方显示的是当前温度值。
系统开关：用以打开/关闭温控器。
工作开关：加热/制冷开关，加热/制冷模式。
风速开关：低速–中速–高速，风闸控制器无此功能。

Dialing button for setting the temperature: The place the finger points to is the current temperature value.
ON/OFF Switch for System: Press ON/OFF Key to turn on/off of the thermostat .
Working Mode switch: Press HEAT/COOL key to switch the heating / cooling mode.
Fan Speed Key:-L-M-H,that is, Low speed-Middle speed-High speed, Wind valve controller does not have this flection.

功能说明 Functions spec

型号 Model	功能说明 Function Explanation	控制对象 Objects Controlled
SP-1000	4 tubes fan coil controller , can be set up to control the fan coil	3 gears of fan coil ,2 and 3 wire of motorized valve , magnetic value on/off wind valve ,3 wires of wind valve .

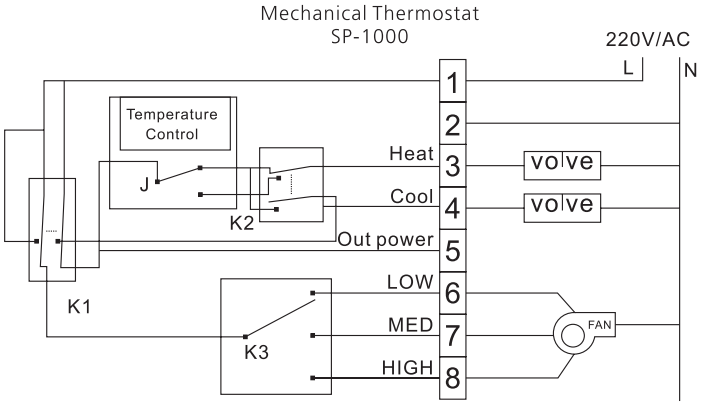

接线示意图 Example of connection

SP-2000

技术参数 Technical Data

- 应用: 适用于中央空调
- 温度控制范围: 10℃~30℃
- 工作电压: 220V~/50Hz
- 最大负载: 10A
- Application: control of central air conditioner or heating
- Temperature control range: 10℃~30℃
- Work voltage :220V~/50Hz
- Max load :10A
- SENSOR type: gas filled sylphon
  With on/off swich ,without LED indicator for power

房间温度控制器 Room Temperature Controller

应用于水暖（地暖）采暖系统，可用于商业楼，住宅楼，轻工大厦等直接采用电加热系统的地方。

For the control of warm-water(floor)heating systems and direct electric heating systems used in Commercial buildings,Residential buildings, Light in dustrial buildings...

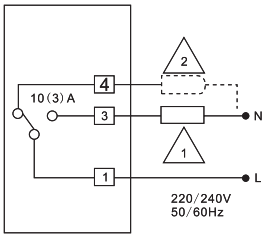

A

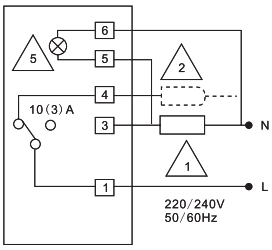

B

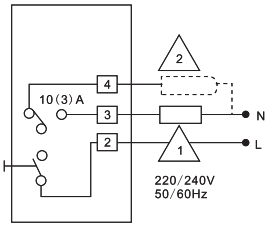

C

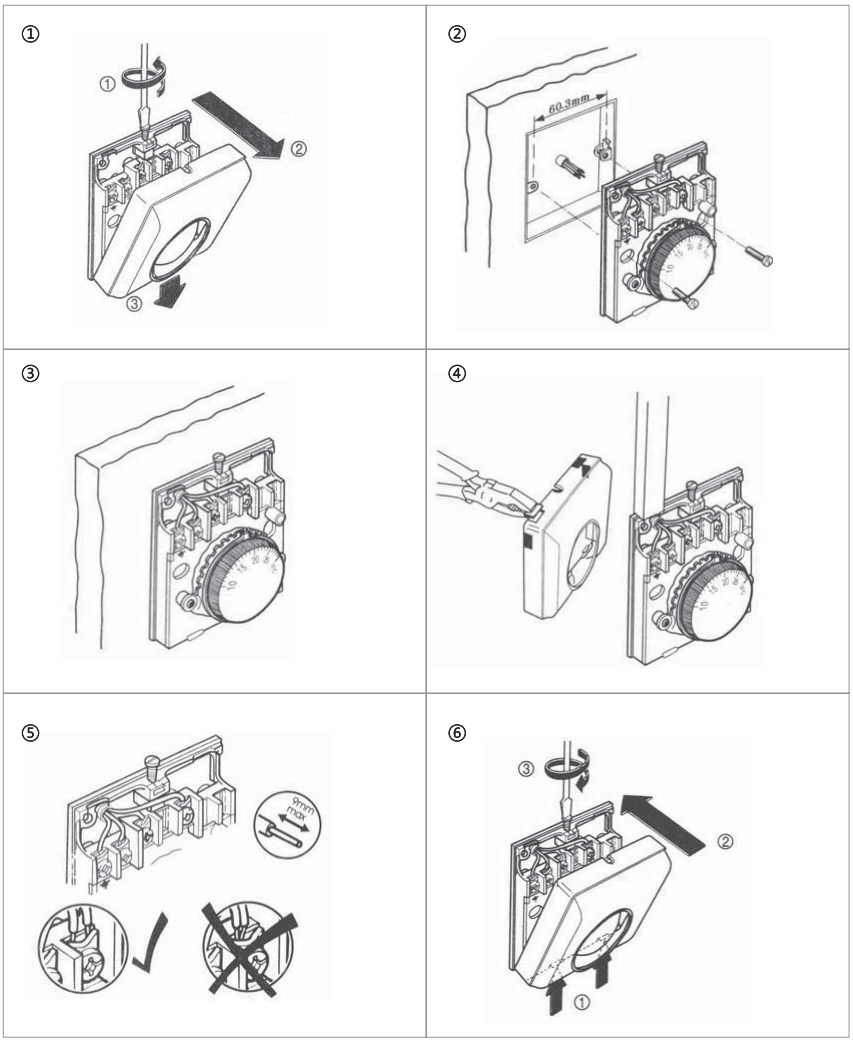

MECHANICAL THERMOSTAT

SP-6000 机械式温控器

SP-6000

SP-6000

概述 Overview

该RTC70.xx用于两位控制带开关输出的室内温度控制，其依靠一个放置在恒温器外部或内部的NTC传感器来控制。温控器使用其内置传感器或地板传感器获取室温，当室内温度降至设定点以下，加热器将开始工作。

The RTC70.xx is used for 2-position control with on/off output for the control the temperature by means of an NTC sensor placed externally or internally in the thermostat. the thermostat acquires the room temperature with its built-in sensor or floor sensor, and the heating contact will close when the room temperature falls below the selected setpoint.

应用 Application

应用于水暖（地暖）采暖系统，可用于商业楼，住宅楼，轻工大厦等直接采用电加热系统的地方。

For the control of warm-water(floor)heating systems and direct electric heating systems used in Commercial buildings,Residential buildings, Light in dustrial buildings...

功能特性 Afeatures

当手动打开加热开关后，LED指示灯亮。旋钮是为了方便控制加热装置输出的开与关。

LED in dicator is light when heating is onwith manual switch and knob for easy operation On/off control output for heating device

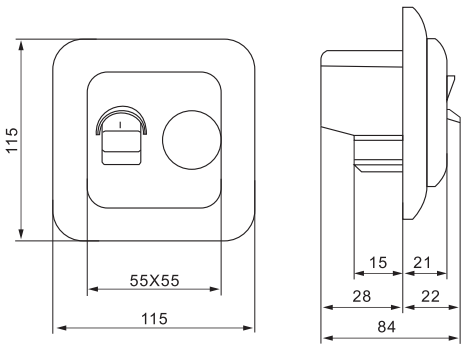

技术参数 Technical Data

电压：AC230V
电流：16A
功耗：5W
温控范围：4℃～45℃
温度开关偏差：±0.5K
环境温差：-5℃～50℃
外壳防护：IP20
外壳材质：热塑性橡胶，NTC探头
外置传感器：线长度为3米

Voltage: AC230V
Output relay: 16A
Power consumption: 5W
Setting range: 4℃～45℃
Switching differential: ±0.5K
Ambient temperature: -5℃～50℃
Protective housing: IP20
Housing material: self-exting uishing PC
Floor sensor: rubber-thermoplastic NTC sensor
Cable length is 3m

Mechanical Thermostat
SP-6000

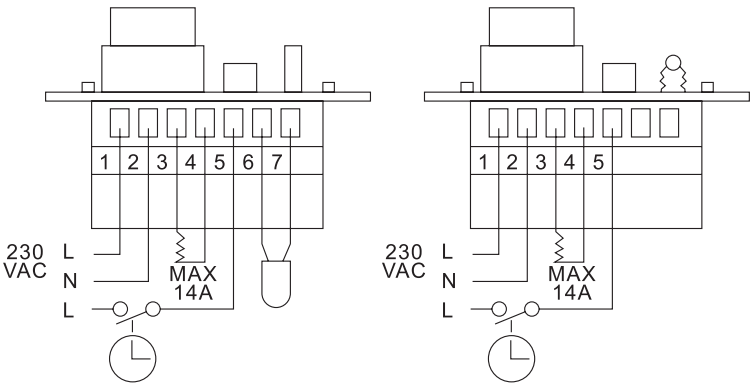

接线示意图 Example of connection

SP7000

产品特性 Features

房间温控器使用说明 Use Instructions Room Thermostat

双金属房间温控器主要用于控制加热和中央空调，断路触点的分段能力具有电子式和机械式特点，10A,250V A.C(电阻负载)，误差值:0.5K

Bimetallic room thermostat for heating and air-conditioning installations Thermal, electrical and mechanical features Breaking capacity on opening contact,10A-250V A.C.(ohmic load) Differential: 0.5K

温度范围调控 Temperature's Scale Adjustment

经过近2天的安装，获得了精确的刻度调整，测量房间的温度，用一个参考温度计，放在一边温控器，持密粗面部分的旋钮，把指标用硬币，为了达到同一个值的温度计，我们建议安装设备从地板about1.5mt和远离热源。

After almost two days from the installation,to obtain a precise scale adjustment, measure the room temperature with a reference thermometer, placed aside the thermostat, holding the shagreened part of the knob, turn the index with a coin, to reach the same value of the thermometer,We suggest to install the equipment at about1.5mt from the floor and far from any heat source.

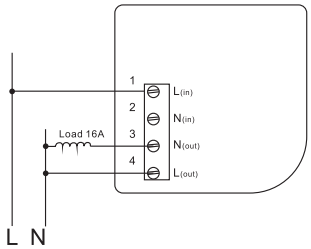

SP7000A Wiring

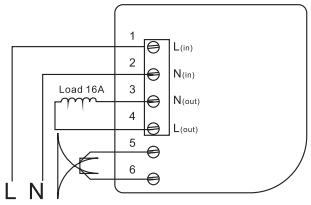

SP7000B Wiring

零部件 Pattern

①底座Base

②盖子Cover

③上盖螺丝Cover screw

④锁销，用于固定Knob Lockpins, The lock pins for scale limitation

⑤调节盘，位于固定孔的位置，与温控器底座分隔开。

are to be derached from the base of the thermostat.They are Located on the fixing holes.

⑥刻度盘，房间温控器可以直接用螺丝安装在墙面上。

Index:The fixing of the room thermostat can be done directly on the wall by screws and nags.

B1–常闭触点

B1–With N.C.contact.

B2–常闭触点和开关

B2–With N.C.contact and ON–OFF switch

B3–单刀双掷（转换开关）

B3–With SPDT contact(change–over)

B4–转换开关（单刀双掷）和开关

B4–With change–over contact(SPDT)and ON–OFF switch

B7–冬常闭，夏常开，以及夏冬双选开关

B7–With normally closed contact on “Winter” and normally opencontact on “Summer” plus “Summer–Winter” selector–switch

注意事项 Important

①交流电源超过220V-250V时，电阻会增大。

Accelerating resistance with voltage to 220-250V a.c.

②温控器设置有加速阻力，必须完全连接好，确保温控器的正常运转。

This thermostat is provided with an accelerating resistance which mustbe absolutely connected in order to obtain the regulation's performances.

③4端口必须按照外壳图示所示，连接到空挡位置。

The terminal 4has thus to be connected to the neutral according to the diagram shown on the cover.

④该接线方式下，指示灯指示温控器的加热操作。

This connection allows also the working of the pilot lamp which indicates the operation of the heating.

REC016 5W，9W

产品特性 Features

- 温度限定Temperature limiting
- 电压范围宽Wide voltage range
- 高效加热Dynamic heating up
- 节能Energy saving
- 轻巧Compact

小型加热器主要用于开关箱，可预防产生凝露。

Small heaters designed to prevent condensation and to ensure a minimum operating temPerature in small enclosures.

技术参数 Technical Data

操作电压Operating voltage	120-240V AC/DC(min. 110V, max. 265V)
发热元件Heating element	PTC发热体 resistor, self regulating and temperature limiting
放热体Heater body	阳极处理铝型材aluminium, anodised
安装方式Connection	螺丝安装screw fixing
安装位置Installation position	任选variable
操作/储存环境Operating/Storage temperature	−45 to +70℃(−49 to +158°F)
防护等级Protection type/Protection class	IP32 / II (double insulated)
外观尺寸Dimensions	长度45mm，直径10mm length 45mm,Φ10mm
配件Accessories	安装夹mounting clips(see illustration)，Art.No.09008.0-01

*Operating with voltages below 140V AC/DC reduces heating performance by approx.10%.

Example of connection

Thermostat KTO 011 (NC)
(contact breaker, normally closed)

Heater RCE 016

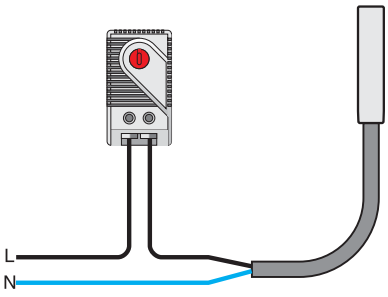

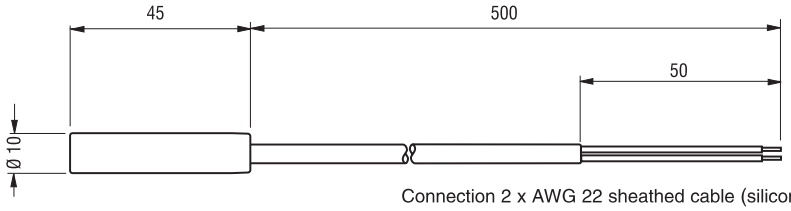

Connection 2 x AWG 22 sheathed cable (silicone)

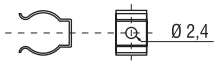

Mounting clips Art. No. 09008.0–01 (1 packing unit = 2 pieces)

订货代码 Art. No.	功率（50Hz） Heating capacity	最大电流 Inrush current max.	表面温度 Surface temperature(approx.)	接线方式 Connection	重量 Weight（approx.）
01623.0-00	5W	2.0A	165° C	2xAWG 22 sheathed cable(silicone)	20g
01622.0-00	9W	2.5A	175° C	2xAWG 22 sheathed cable(silicone)	20g

*at 20℃ (68°F) ambient temperature

RC SMALL SEMICONDUCTOR HEATER
小型半导体加热器

RC 016 8W,10W,13W

产品特性 Features

- 温度限定Temperature limiting
- 电压范围宽Wide voltage range
- 高效加热Dynamic heating up
- 节能Energy saving
- 轻巧Compact

小型加热器主要用于开关箱，可预防产生凝露。
These small heaters are designed to prevent condensation and to ensure a minimum operating temperature in small enclosures.

技术参数 Technical Data

操作电压Operating voltage	120-240V AC/DC(min. 110V, max. 265V)
发热元件Heating element	PTC发热体 resistor, self regulating and temperature limiting
放热体Heater body	阳极处理铝型材aluminium, anodised
安装方式Connection	螺丝安装screw fixing
安装位置Installation position	任选variable
操作/储存环境Operating/Storage temperature	−45 to +70℃(−49 to +158°F)
防护等级Protection type/Protection class	IP32 / II (double insulated)

*Operating with voltages below 140V AC/DC reduces heating performance by approx. 10%.

Example of connection

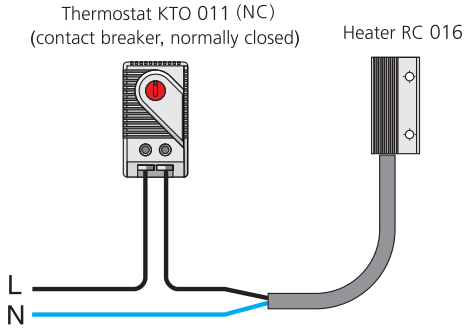

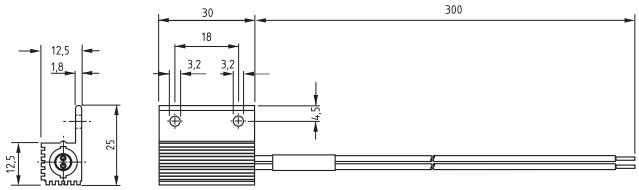

Art. No. 01602.0–00: Connection 2 x AWG 18 stranded wire

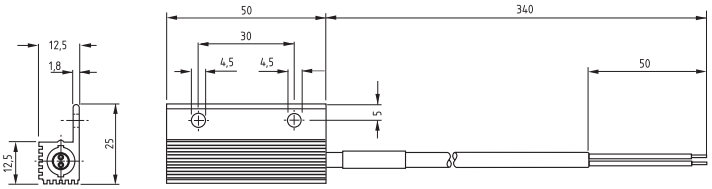

Art. No. 01609.0-00: Connection 2 x AWG 22 sheathed cable (silicone)

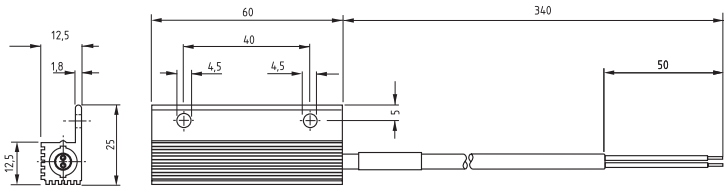

Art. No. 01610.0-00: Connection 2 x AWG 22 sheathed cable (silicone)

订货代码 Art. No.	功率 Heating capacity	最大电流 Inrush current max.	表面温度 Surface temperature (approx.)	接线方式 Connection	重量 Weight (approx.)
01602.0-00	8W	2.0A	150℃	2 x AWG 18 stranded wire	20g
01609.0-00	10W	2.5A	155℃	2 x AWG 22 sheathed cable (silicone)	30g
01610.0-00	13W	3.0A	170℃	2 x AWG 22 sheathed cable (silicone)	40g

*at 20℃ (68°F) ambient temperature

HGK 047 10W -150W

产品特性 Features

- 高效加热Dynamic heating up
- 节能Energy saving
- 电压范围宽Wide voltage range
- 温度限定Temperature limiting
- 导轨安装Clip fixing

加热器主要用于开关箱，可避免产生凝露，预防温度降至零下或降至最小需求值时，用此方法可避免生锈，确保箱内温度恒定。

The heaters are used in enclosures where condensation is to be prevented or the temperature may not fall below a minimum value. In this way corrosion is avoided and an even temperature is ensured.

技术参数 Technical Data

发热元件Heating element	PTC发热体，自我调节和温度控制 PTC resistor, self regulating and temperature limiting
发热体Heater body	阳极处理挤压铝型材extruded aluminium profile, anodised
安装方式Mounting	35mm DIN 轨道,EN 50022clip for 35mm DIN rail, EN 60715
安装位置Installation position	垂直方向vertical
操作/储存环境Operating/Storage temperature	−45 to +70℃ (−49to +158°F)
防护等级Protection type/Protection class	IP54 / I (earthed)

Example of connection

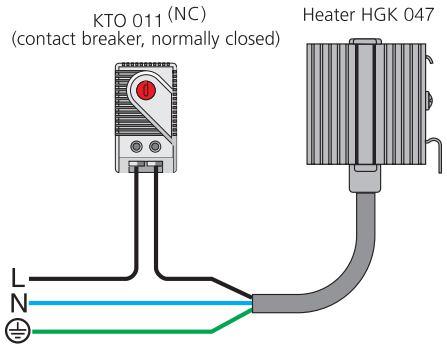

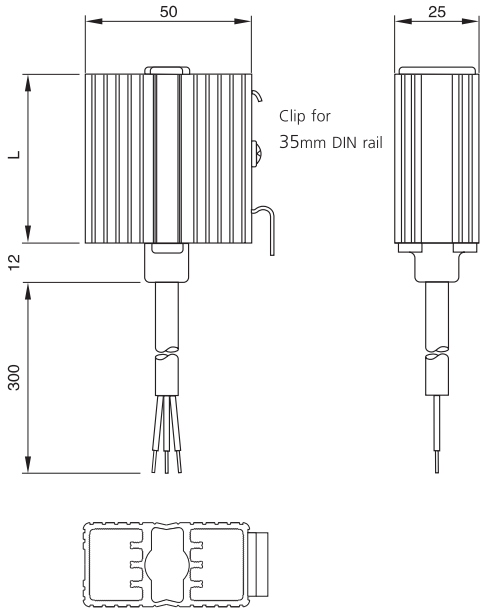

订货代码 Art. No.	操作电压 Operating voltage	功率 Heating capacity 1)	电流最大值 Inrush current max.	长度(L) Length (L)	重量 Weight(approx.)	接线方式 Connection
04700.0-00	120-240V AC/DC	10W	1.0A	50mm	0.10kg	3 x 0.5mm²x 300mm sheathed cable(silicone)护套电缆
04701.0-00	120-240V AC/DC	20W	2.5A	60mm	0.20kg	3 x 0.5mm²x 300mm sheathed cable(silicone)护套电缆
04702.0-00	120-240V AC/DC	30W	3.0A	70mm	0.20kg	3 x 0.5mm²x 300mm sheathed cable(silicone)护套电缆
04700.9-00	110-120V AC/DC	10W	1.0A	50mm	0.10kg	3 x AWG 20 x 300mm sheathed cable护套电缆
04701.9-00	110-120V AC/DC	20W	1.5A	70mm	0.20kg	3 x AWG 20 x 300mm sheathed cable护套电缆
04702.9-00	110-120V AC/DC	30W	1.5A	100mm	0.20kg	3 x AWG 20 x 300mm sheathed cable护套电缆

1) at 20℃(68° F) ambient temperature
2) (min. 110V, max 265V) Operating with voltages below 140V AC/DC reduces heating performance by approx. 10%.

HG PRESSURE COMPENSATION DEVICE
半导体加热器

HG 140 15W -150W

产品特性 Features

- 端子式接线Pressure clamp connectors
- 高效加热Dynamic heating up
- 电压范围宽Wide voltage range
- 温度限定Temperature limiting
- 节能Energy saving
- 导轨固定Clip fixing
- 快速安装Quick installation

电热器使用于开关箱当中预防产生凝露，防止温度降至零下或降至最低设定值。

These heaters are used in enclosures where damage from condensation must be prevented, or where the temperature may not fall below a minimum value. The aluminium profile heater body design has a chimney effect and distributes the heat evenly. The pressure clamp connectors save time and simplify installation.

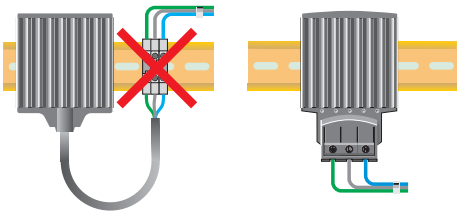

技术参数 Technical Data

操作电压Operating voltage	120-240V AC/DC*(min.110V,max.265V)
发热原件Heating element	PTC发热体 PTC resistor, self regulating and temperature limiting
发热体Heater body	阳极处理挤压铝型材extruded aluminium profile, anodised
接线方式Connection	3个接线端子接入线径0.5-1.5mm^2 3 pressure clamps for stranded wire 0.5-1.5mm^2 (with wire end ferrule) and rigid wire 0.5-1.5mm^2
外壳材料Connection casing	黑色塑料,UL94V-0标准,V-0防火等级 plastic according to UL94 V-0,black
安装方式Mounting	35mmDIN导轨安装,clip for 35mm DIN rail, EN 60715
安装位置Installation position	垂直vertical
操作/储存环境Operating/Storage temperature	−20 to +70℃(−4 to +158°F)
防护等级Protection type/Protection class	IP54 / I (earthed)

*工作电压低于140VAC/DC时，加热性能降低约10%

*Operating with voltages below 140V AC/DC reduces heating performance by approx. 10%.

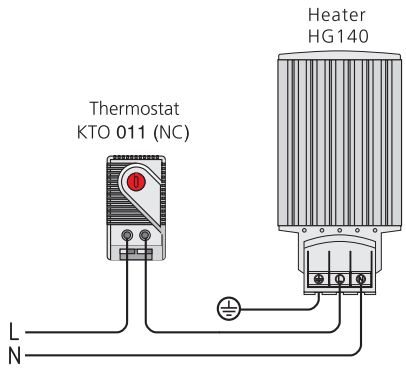

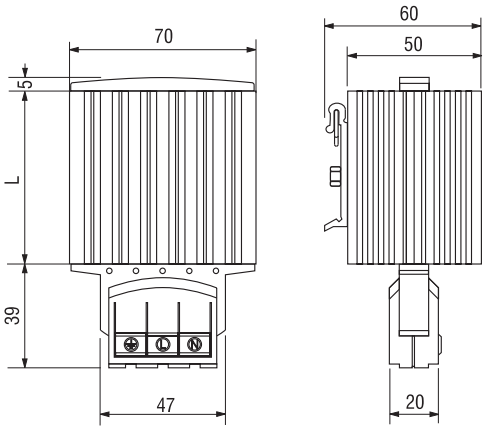

订货代码	功率	最大电流	长度(L)	重量
Art. No.	Heating capacity	Inrush current max.	Length (L)	Weight (approx.)
14000.0-00	15W	1.5A	65mm	0.30kg
14001.0-00	30W	3.0A	65mm	0.30kg
14003.0-00	45W	3.5A	65mm	0.30kg
14005.0-00	60W	2.5A	140mm	0.40kg
14006.0-00	75W	4.0A	140mm	0.50kg
14007.0-00	100W	4.5A	140mm	0.50kg
14008.0-00	150W	9.0A	220mm	0.70kg

*at 20℃(68°F) ambient temperature

CREx 020 50W, 100W

产品特性 Features

- 高效表面散热Large convection surface
- 导轨安装Clip fixing
- 使用方便Ready for use
- 免维护Maintenance free

防爆加热器用于危险区域场所，防止因环境温度变化时形成凝露。

Compact convection heater for use in areas with explosion hazard for prevention of formation of condensation, temperature fluctuations and for protection against frost in transmitter housings, switch cabinets and measuring equipment.

技术参数 Technical Data

防爆认证EN Explosion protection according to EN	LCIE (Laboratoire Central des Industries Electriques)
符合的认证Conformity certificate	01 ATEX 6073/03, LCIE N° 06 ATEX Q8011, IECEx LCI 07. 0020
发热元件Heating element	high performance cartridge
发热体Heater body	阳极处理铝合金aluminium profile, black anodised
接线方式Connection	Si HF–JZ 3 x 0.75mm² cable, length 1m
连接PEConnection PE	4mm²
安装方式Mounting	35mm DIN导轨安装,clip for 35mm DIN rail, EN 60715
安装位置Installation position	垂直方向vertical
操作/储存环境Operating/Storage temperature	–20 to +40℃(–4 to +104° F)/-45 to +70℃(–49 to +158° F)
防护等级Protection type/Protection class	IP65 / I (earthed)

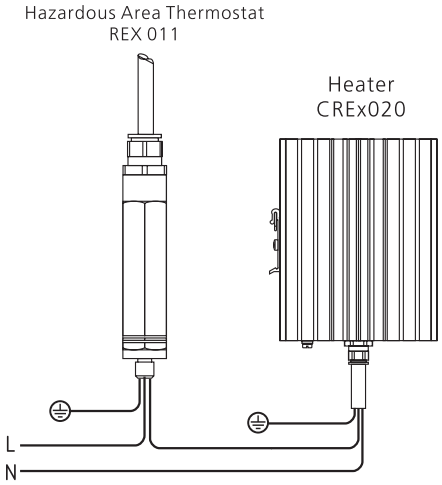

接线示意图 Example of connection

Hazardous area Thermostat REx 011
see page 39

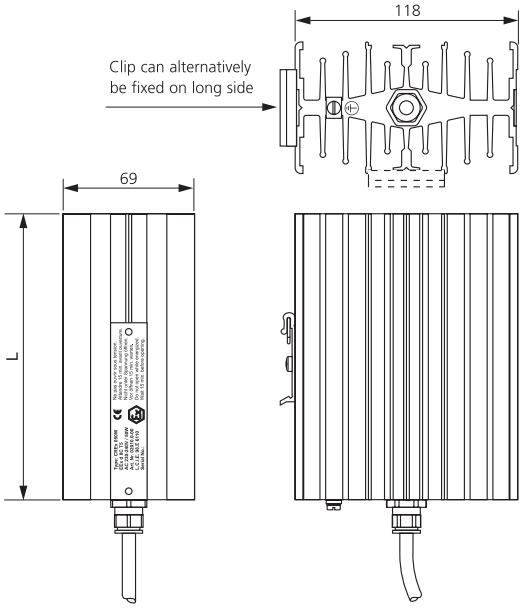

订货代码 Art. No.	操作电压 Operating voltage	功率 Heating capacity	防爆保护类型 Ex protection type	表面温度 Surface temperature	长度(L) Length (L)	重量 Weight (approx.)
02010.0-00	230-240VAC	50W	d IIC T5 - Ex tD A21 IP6X T100° F	100° F	150mm	1.30kg
02011.0-00	230-240VAC	100W	d IIC T4 - Ex tD A21 IP6X T135° F	135° F	180mm	1.50kg
02010.0-01	110-120VAC	50W	d IIC T5 - Ex tD A21 IP6X T100° F	100° F	150mm	1.30kg
02011.0-01	110-120VAC	100W	d IIC T4 - Ex tD A21 IP6X T135° F	135° F	180mm	1.50kg

CS TOUCH-SAFE HEATER
触摸安全型加热器

CS 060 50W-150W

产品特性 Features

- 表面温度低Low surface temperature
- 导轨式安装Quick mounting due to clip fixing
- 双绝缘（塑料）Doble insulated (plastic)
- 宽电压范围Wide ovltage range
- 小体积Small size

触摸安全型加热器主要用于有关电气和电子的配件的开关箱中，其设计采用自然对流方案，从产品加热体到外壳表面的设计采用温度逐渐降低的设计理念。我们全系列的温控器和湿度控制器均可直接连接到加热器CS 060上使用。其次该加热器也可与外挂恒温器连接，不用单独接线。

Touch-safe heater for the use in enclosures with electrical/electronical components.The design of the heater supports the natural convection which results in a high air-current of warm air.The surface temperatures on the accessible side surfaces of the housing are kept down as a result of the heater design . Our complete range of thermostats and hygrostats can directly be connected to the heater CS 060. This heater is also available in a version with plug-in thermostat requiring no additional wiring (CSF 060). Both versions are designed for permanent operation.

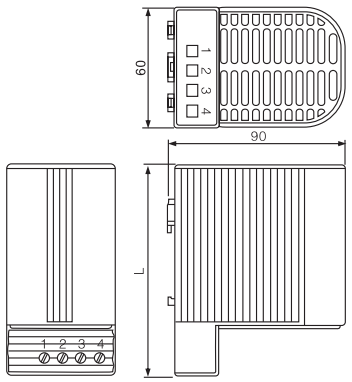

技术参数 Technical Data

操作电压Operating voltage	120-240V AC/DC*(min.110V,max.265V)
加热功率Heating capacity	见下表 see table
加热原件Heater element	PTC限温元件 PTC resistor–temperature limiting
表面温度Surface temperature	除了上部防护的网格均<80℃(176° F) <80℃(176° F) ,except upper protective grille
接线方式Connection	螺丝 4-pole terminal 2.5mm², torpue 0.8Nm max.
外壳材料Casing	黑色塑料，UL94V–0标准，V–0防火等级 Plastic according to UL94-V–0,black
安装方式Mounting	35mm DIN导轨安装 clip for 35mm DIN rail,EN 50022
安装位置Installation position	垂直 Vertical
操作储存环境Operating/storage tmperature	–45 to+70℃(–49 to +158° F)
防护等级Ptotection type/Protection class	IP20/II (double insulated)
认证Approvals	CE
注意Note	其他电压可定做 other voltages on request

*工作电压低于140VAC/DC时，加热性能降低约10%
*Operating with voltages below 140V AC/DC reduces heating performance by approx. 10%.

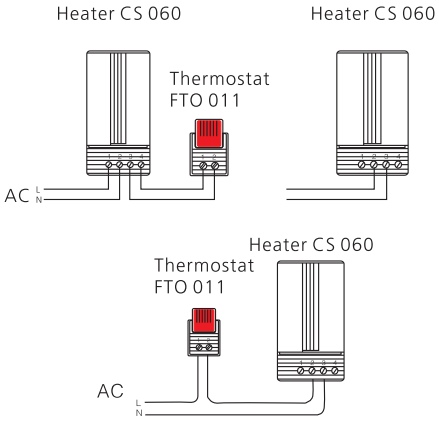

接线示意图
Examples of connection

加热功率
Heating capacity / Ambient temperature diagram CS 060

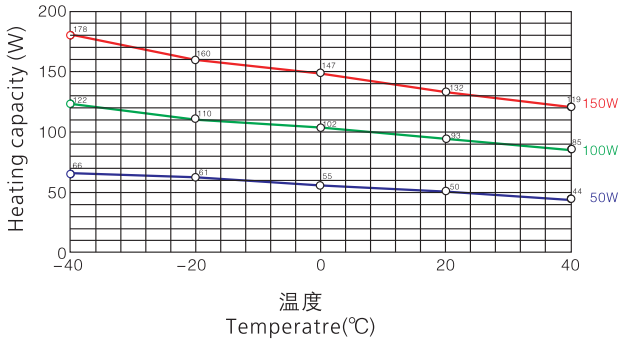

订货代码 Art. No.	功率 Heating capacity	电流最大值 Inrush current max.	空气出口温度 Air outlet temperature	尺寸 Dimensions	重量 Weight (approx.)
06000.0–00	50W	2.5A	+86℃（186.8° F）	110x60x90mm	0.30kg
06010.0–00	100W	4.5A	+120℃（248° F）	110x60x90mm	0.30kg
06020.0–00	150W	8A	+145℃（293° F）	150x60x90mm	0.30kg

1)amdient temperature-see Heating capacity/Ambient temperattre diagram; 2)measured 50mm above protective grille;

CSF 060 50W-150W

产品特性 Features

- 表面温度低Low surface temperature
- 导轨式安装Quick mounting due to clip fixing
- 双绝缘（塑料）Doble insulated (plastic)
- 宽电压范围Wide ovltage range
- 小体积Small size
- 智能温控器Integrated thermostat

触摸安全型加热器主要用于有关电气和电子配件的开关箱中，其设计采用自然对流方案，从产品加热体到外壳表面的设计采用温度逐渐降低的设计理念，该加热器也可与外挂恒温器连接，不用单独接线，也可以在不加温控器的情况下使用。

Touch-safe heater for the use in enclosures with electrical/electronical components. The design of the heater supports the natural convection which results in a high air-current of warm air. The surface temperatures on the accessible side surfaces of the housing are kept down as a result of the heater design. This model with plug-in thermostat does not require additional wiring. The heaters are designed for perm-anent operation. This heater is also available in a version without thermostat(CS 060).

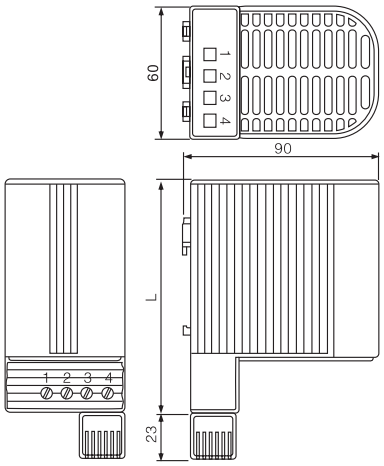

技术参数 Technical Data

操作电压Operating voltage	120-240V AC/DC*(min.110V,max.265V)
加热功率Heating capacity	见下表 see table
加热原件Heater element	PTC限温元件 PTC resistor–temperature limiting
表面温度Surface temperature	除了上部防护的网格均<80℃(176° F) <80℃(176° F) ,except upper protective grille
接线方式Connection	螺丝 4-pole terminal 2.5mm² ,torpue 0.8Nm max.
外壳材料Casing	黑色塑料，UL94V–0标准，V–0防火等级 Plastic according to UL94-V–0,black
安装方式Mounting	35mm DIN导轨安装 clip for 35mm DIN rail,EN 50022
安装位置Installation position	垂直 Vertical
操作储存环境Operating/storage tmperature	–20 to+70℃(–4 to +158° F)/–45 to +70℃(–49 to +158° F)
防护等级Ptotection type/Protection class	IP20/II (double insulated)
认证Approvals	VDE+UL File No.E15057(according to UL499 in combination with UL508A)
注意Note	其他电压可定做 other voltages on request

*工作电压低于140VAC/DC时，加热性能降低约10%
*Operating with voltages below 140V AC/DC reduces heating performance by approx. 10%.

Heater CS 060

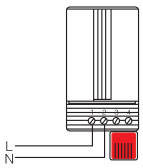

接线示意图
Examples of connection

加热功率
Heating capacity / Ambient temperature diagram CS 060

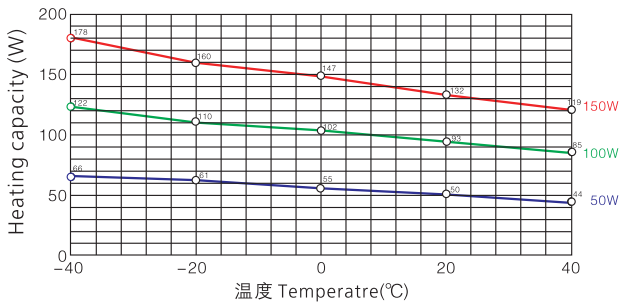

订货代码 Art. No.	功率 Heating capacity	电流最大值 Inrush current max.	空气出口温度 Air outlet temperature	关闸温度 Switch–off temperature	尺寸 Dimensions	重量 Weight (approx.)
06001.0-00	50W	2.5A	+86℃（186.8°F）	+15℃（59°F）	110x60x90mm	0.30kg
06002.0-00	50W	2.5A	+86℃（186.8° F）	+25℃（77° F）	110x60x90mm	0.30kg
06011.0-00	100W	4.5A	+120℃（248° F）	+15℃（59° F）	110x60x90mm	0.30kg
06012.0-00	100W	4.5A	+120℃（248° F）	+25℃（77° F）	110x60x90mm	0.30kg
06021.0-00	150W	8A	+145℃（293° F）	+15℃（59° F）	150x60x90mm	0.50kg
06022.0-00	150W	8A	+145℃（293° F）	+25℃（77° F）	150x60x90mm	0.50kg

1)amdient temperature–see Heating capacity/Ambient temperattre diagram; 2)measured 50mm above protective grille;

CSL

SMALL COMPACT SEMICONDUCTOR FAN HEATER
小型半导体风机加热器

CSL028 150W,250W,400W

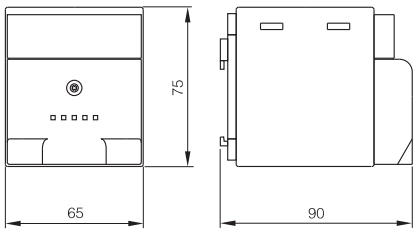

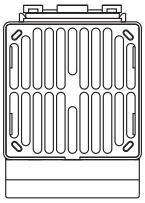

产品特性 Features

- 紧凑型设计Small, compact design
- 无噪声Quiet in operation
- 高效加热Dynamic heating up
- 导轨或螺丝安装Clip or screw fixing

风扇加热器使用于配电柜中，该产品可用螺丝安装或DIN导轨安装，该加热器可保护开关元件和控制器柜内的温度，防止凝露。

Fan heater prevents formation of condensation and provides an evenly distributed interior air temperature in enclosures with electric/electronic components. The heater is connected using the internal terminal connectors The CS 028 small size make it ideal for use in enclosures where space is at a premium.

技术参数 Technical Data

发热元件Heating element	PTC发热元件 PTC heating element
最大峰值电流Inrush current max.	2A at 230VAC, 5A at 120VAC
表面温度Surface temperature	最高65℃(149°F) Max. 65℃(149°F)
滚珠风机Axial fan, ball bearing	空气流动13.8 m^3/h,(在 40℃时使用寿命40,000h) air flow 13.8 m^3/h, free flow (service life 40,000h at 40℃)
接线方式Connection	2极夹具（最大2.5平方毫米） 2-pole clamp max. 2.5mm^2
外壳材料Casing	黑色塑料,UL94V-0标准,V-0防火等级 plastic according to UL94 V-0,black
安装方式Mounting	35mmDIN导轨安装,clip for 35mm DIN rail, EN 60715
安装角度Fitting position	垂直vertical
重量Weight	大约0.30千克 approx. 0.30kg
操作/储存环境Operating/Storage temperature	−45 to +70℃(−49 to +158° F)
防护等级Protection type/Protection class	IP20 / II (double insulated)
注意Note	其他电压可定做other voltages on request

View: back side

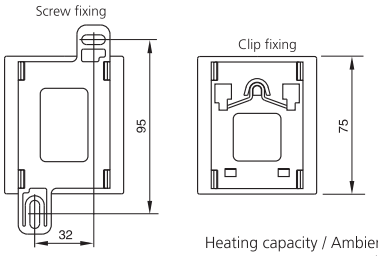

Example of connection

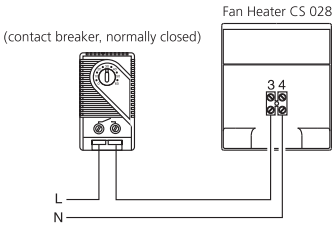

Heating capacity / Ambient temperature diagram
CS 028 (150W)

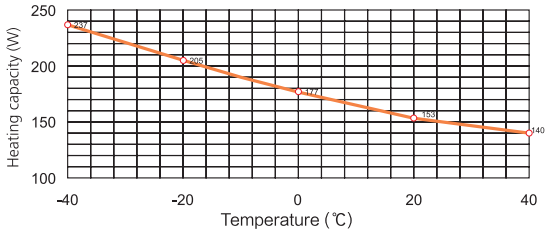

订货代号Art. No. 导轨安装Clip fixing	订货代号Art. No. 螺丝安装Screw fixing	操作电压 Operating voltage	功率 Heating capacity	尺寸 Dimensions	重量 Weight (approx.)
02800.0-00	02800.0-01	230VAC, 50/60Hz	150W	90×85 ×111mm	0.5kg
02811.0-00	02811.0-01	230VAC, 50/60Hz	250W	90×85 × 111mm	0.5kg
02810.0-00	02810.0-01	230VAC, 50/60Hz	400W	90×85 ×111mm	0.5kg
02800.9-00	02800.9-01	120VAC, 50/60Hz	150W	90×85 × 111mm	0.5kg
02811.9-00	02811.9-01	120VAC, 50/60Hz	250W	90×85 × 111mm	0.5kg
02810.9-00	02810.9-01	120VAC, 50/60Hz	400W	90×85 ×111mm	0.5kg

*at 20℃(68°F) ambient temperature

HGL 046 250W-400W

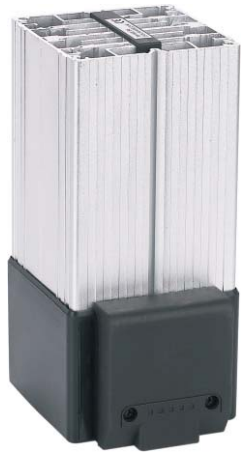

产品特性 Features

- 紧凑的设计Compact design
- 导轨式安装Clip fixing
- 使用寿命长Long service life
- 免维护Maintenance free
- 安全温度断流功能Temperature safety cut–out

轻巧型风机加热器可预防冷凝的形成，一体化高性能轴流风扇可提供强力空气循环，使开关箱内温度恒定。当风扇发生故障时，加热器内安全切断开关会自动停止加热器的工作。

Compact fan heater prevents formation of condensation. The integrated high performance axial fan provides forced air circulation and so guarantees an even temperature in enclosures. With internal terminal connector.

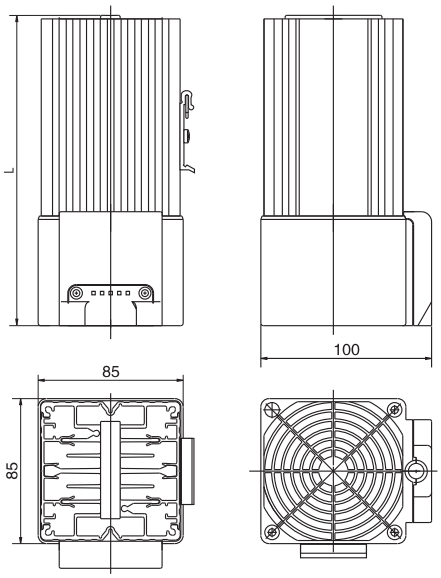

技术参数 Technical Data

发热元件Heating element	电阻加热器resistance heater
温度保护Temperature safety cut–out	防止过热引起的风扇不运转 to protect against overheating in case of fan failure
发热体Heater body	通过极化处理的铝型材anodised extruded aluminium profile
表面温度Surface temperature	最高75℃ max. 75℃ (400W)
滚珠轴流式风扇 Axial fan, ball bearing	气流自由流动Airflow, free flow AC: 45m³/h (50Hz) or 54m³/h (60Hz) DC: 54m³/h 使用寿命50,000小时 service life 50,000h at 25℃ (77°F)
接线方式Connection	1.5mm²导线引入 internal connection terminal 1.5mm² with strain relief, clamping torque 0.8Nm max.
外壳材料Connection casing	黑色塑料,UL94V–0标准,V–0防火等级 plastic according to UL94 V–0,black
安装方式Mounting	35mmDIN导轨安装,clip for 35mm DIN rail, EN 60715
安装位置Installation position	垂直vertical
操作/储存环境Operating/Storage temperature	–45 to +70℃(–49 to +158°F)
防护等级Protection type/Protection class	IP20 / I (earthed)

注意：在24VDC和48VDC情况下，风机加热器经过电子继电器转换，因此我们推荐我们的继电器SM010 (Art. No. 01000.0–00 and 01001.0–00)
Note: In the case of 24VDC and 48VDC the fan heater has to be switched via a relay. For this purpose we recommend our electronic relay SM 010 (Art. No. 01000.0–00 and 01001.0–00).

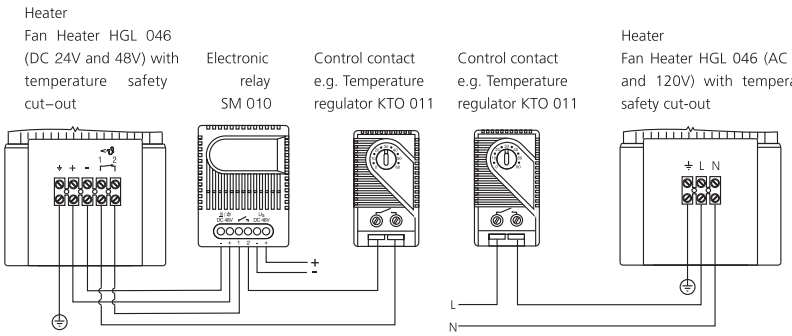

订货代码 Art. No.	操作电压 Operating voltage	功率 Heating capacity	长度(L) Length (L)	重量 Weight (approx.)
04640.0-00	230VAC, 50/60Hz	250W	182mm	1.10kg
04641.0-00	230VAC, 50/60Hz	400W	222mm	1.40kg
04640.9-00	120VAC, 50/60Hz	250W	182mm	1.10kg
04641.9-00	120VAC, 50/60Hz	400W	222mm	1.40kg
04640.1-00	24VDC	250W	182mm	1.10kg
04640.2-00	48VDC	250W	182mm	1.10kg
04641.2-00	48VDC	400W	222mm	1.40kg

HV HVL SPACE-SAVING FAN HEATER
风机加热器

HV 031/HVL 031 100W- 400W

产品特性 Features

- 紧凑 Compact
- 扁平设计Flat design
- 空气流动性好 High air through-flow
- 温度安全保护开关 Temperature safety cut-out
- 导轨安装Clip fixing

紧凑高性能风机加热器可预防凝露的形成，该产品有带风机式加热器，型号为HVL031,也有不带风机式的，型号为HV031。

The compact high-performance fan heater prevents formation of condensation in control or switch systems and provides an evenly distributed interior air temperature in enclosures. This fan heater is available without fan (HV 031) as well as with fan (HVL 031).

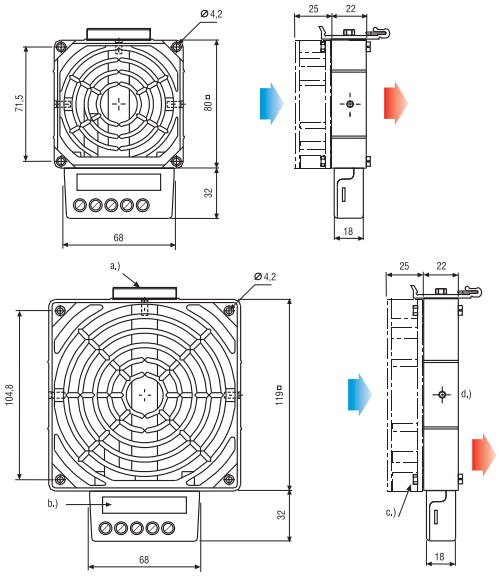

a.) Clip b.) Type plate c.) Axial fan d.) Air direction

技术参数 Technical Data

HV 031	无风机加热器Heater without fan (fan mounting kit included)
HVL 031	带风机加热器Heater with fan
发热元件Heating element	高性能芯子high performance cartridge
温度安全保护Temperature safety cut-out	保护过热引起的风扇不工作to protect against overheating in case of fan failure
加热体材料Heater body	铝 die-cast aluminium (glass bead blasted)
接线方式Connection	3极钳压 2.5mm2，最大扭矩0.8Nm 3-pole screw connector 2.5mm² clamping torque 0.8Nm max.
端子接线盒材料Connection casing	黑色塑料,UL94V-0标准,V-0防火等级 plastic according to UL94 V-0,black
安装方式Mounting	35mmDIN导轨安装,clip for 35mm DIN rail, EN 60715
安装位置Installation position	水平horizontal
操作/储存环境Operating/Storage temperature	-45 to +70℃ (-49 to +158° F)
防护等级Protection type/Protection class	IP20 / I (earthed)
滚珠风机 Axial fan, ball bearing	使用寿命50,000小时25℃(77° F) airflow see table service life 50,000h at 25℃(77° F)
风机连接方式 Connection(axial fan)	2极螺丝连接2.5mm²导线(L2/N2) 2-pole screw connector 2.5mm²(L2/N2)

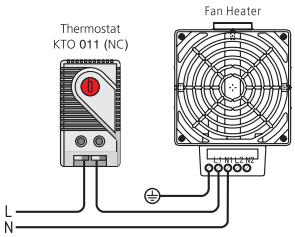

重要！加热器只能与风扇一起操作，过热危险！

Important! Heater may only be operated together with fan. Danger of overheating!

订货代号Art. No. HV 031 230VAC, 50/60Hz	订货代号Art. No. HV 031 120VAC,50/60Hz	功率 Heating capacity	尺寸 Dimensions	重量 Weight(approx.)
03100.0-00	03100.9-00	100W	80 x 112 x 22mm	0.40kg
03101.0-00	03101.9-00	150W	80 x 112 x 22mm	0.40kg
03110.0-00	03110.9-00	200W	119 x 151 x 22mm	0.50kg
03111.0-00	03111.9-00	300W	119 x 151 x 22mm	0.50kg
03112.0-00	03112.9-00	400W	119 x 151 x 22mm	0.50kg

订货代号Art. No. HVL 031 230VAC, 50/60Hz	订货代号Art. No. HVL 031 120VAC,50/60Hz	功率 Heating capacity	最小风流量 Airflow min.,free flow	尺寸 Dimensions	重量 Weight(approx.)
03102.0-00	03102.9-00	100W	35m³/h	80 x 112 x 47mm	0.60kg
03103.0-00	03103.9-00	150W	35m³/h	80 x 112 x 47mm	0.60kg
03113.0-00	03113.9-00	200W	108m³/h	119 x 151 x 47mm	0.90kg
03114.0-00	03114.9-00	300W	108m³/h	119 x 151 x 47mm	0.90kg
03115.0-00	03115.9-00	400W	108m³/h	119 x 151 x 47mm	0.90kg

SEMICONDUCTOR FAN HEATER
半导体风机加热器 CR027

CR027

产品特性 Features

- 紧凑型加热器Compact heater
- 加热功率可调Heating capacity adjusts to ambient temperature
- 温度范围可调Adjustable temperature range
- 导轨安装Clip fixing
- 信号指示Optical indicator
- 温度安全保护 Temperature safety cut–out

半导体式风机加热器主要用于配电柜体内，防止产生凝露，一体设计的调节器用于调整温度的变化。

Semiconductor fan heaters prevent the formation of condensation and ensure en even temperature in switch and control equipment. The built–in regulator is used to set the desired temperature.

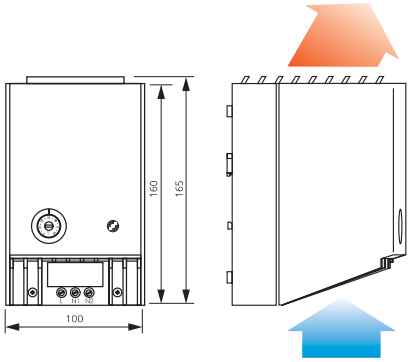

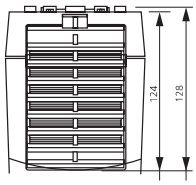

技术参数 Technical Data

发热体Heater body	PTC resistor, self regulating and temperature limiting
温度保护 Temperature safety cut–out	过热保护 to protect against overheating in case of fan failure
滚珠风机Axial fan, ball bearing	风量见如下图表airflow see table service life 50,000h at 25℃ (77° F)
接线方式Connection	两极钳压 2.5mm^2，最大扭矩0.8Nm 2-pole clamp max. 2.5mm^2 clamping screw torque 0.8Nm max.
外壳材料Casing	浅灰色塑料,UL94V-0标准,V-0防火等级 plastic according to UL94 V-0,light grey
信号指示Optical indicator	恒温控制灯thermostat control lamp
安装方式Mounting	35mmDIN导轨安装,clip for 35mm DIN rail, EN 60715
安装位置Installation position	垂直vertical
外观尺寸Dimensions	100 x 128 x 165mm
操作/储存环境Operating/Storage temperature	–45 to +70℃(–49 to +158° F)
防护等级Protection type/Protection class	IP20 / II (double insulated)

接线示意图
Connection Diagram

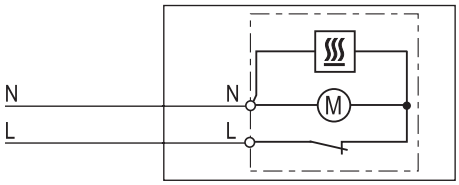

加热功率
Heating capacity / Ambient temperature diagram CR 027 (50Hz)

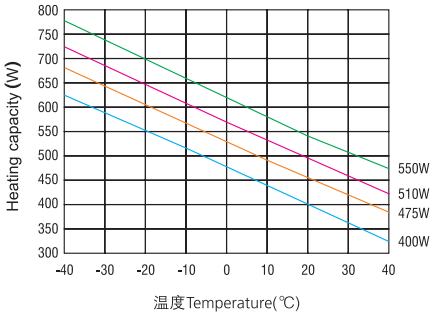

加热功率
Heating capacity / Ambient temperature diagram CR 027 (60Hz)

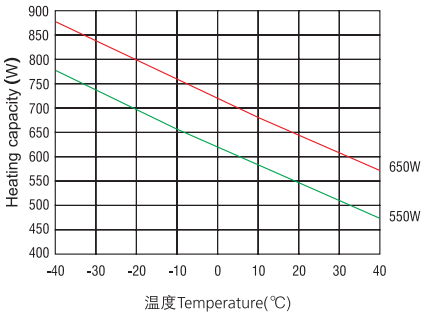

订货代码 Art. No.	工作电压 Operating voltage	功率(50Hz) Heating capacity	功率(60Hz) Heating capacity	最大电流 Inrush current max.	风量 Airflow,free flow	温度范围 Setting range Temp.regulator	重量 Weight
02700.0-00	220-240VAC, 50/60Hz	475W	550W	11.0A	35m^3/h	0 to +60℃	0.90kg
02701.0-00	220-240VAC, 50/60Hz	550W	650W	13.0A	45m^3/h	0 to +60℃	1.10kg
02700.9-00	100-120VAC, 50/60Hz	400W	550W	14.0A	35m^3/h	+32 to +140° F	0.90kg
02701.9-00	100-120VAC, 50/60Hz	510W	650W	15.0A	45m^3/h	+32 to +140° F	1.10kg

*at 20℃(68°F) ambient temperature

CR 030

COMPACT HIGH-PERFORMANCE FAN HEATER
紧凑高效型风机加热器

CR 030 750W,850W,950W

产品特性 Features

- 紧凑型设计Compact design
- 双绝缘Double insulated
- 智能温控器Integrated thermostat(optional)

这种紧凑高性能风机加热器能防止产生凝露，为机箱内部提供分布均匀的空气温度环境。塑料外壳具有双绝缘功能，起接触保护作用。这款风机加热器可提供集成的恒温或先的温度或湿度控制恒温器。CR130可固定在配电柜的底部，也可以固定在上。

The compact high performance fan heater prevents formation of condensation and provides an evenly distributed interior air temperature in enclosures with electric/electronic components.
The plastic enclosure provides double insulation and acts as protection against contact. The fan heater is available with integrated thermostat or pre-set hygrostat for temperature or humidity control The CR 030 was designed as a stationary unit for the bottom of the enclosure.
For wall fixing the fan heater CR 130 is resommended.

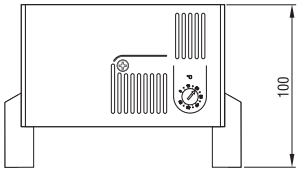

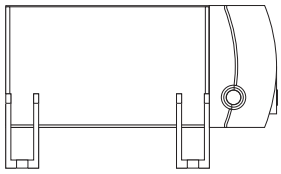

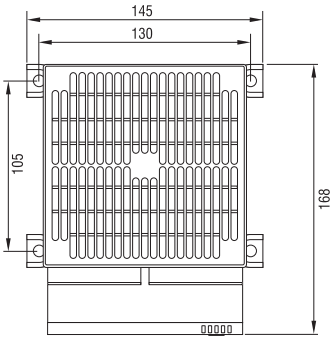

技术参数 Technical Data

加热元件Heater element	高性能管壳 High performance cartridge
温度保护Temperature safety cut-out	过热保护 to protect against overheating in case of fan failure
	自动复位 automatic reset
加热主体Heater body	极化处理铝型材 extruded aluminium profile
滚珠轴流式风机Axial fan, ball bearing	气流160m³/h,自由流动 Airflow 160m³/h, free flow
	使用寿命50,000小时 at25°C(77°F) service life 50,000h at25°C(77°F)
接线方式Connection	2-极点最大值。2.5mm²固定螺丝溢放口力矩最大值 2-pole max. 2.5mm², clamping screw with strain relief, torque 0.8Nm max.
外壳材料Casing	黑色塑料,UL94V–0标准,V–0防火等级 plastic according to UL94 V-0, black
安装方式Mounting	螺丝固定(M5) screw fixing(M5)
安装位置Installation position	水平 horizontal
外观尺寸Dimensions	168 x 145x 100mm
重量Weight	大约1.40千克 approx.1.40kg
操作/储存环境Operating/Storage temperature	–45 to +70℃(–49 to +158°F)
防护等级Protection type/Protection class	IP20 / II 双绝缘(double insulated)
备注Note	功率达到2000W以上可定制Other heating capacities from 200W up available on request

*加热器的工作温度：0到+60℃（+32 to+140°F）
Operating temperature of heater with integrated hygrostat: 0 to +60°C(+32 to +140°F)

接线示意图
Connection Diagram

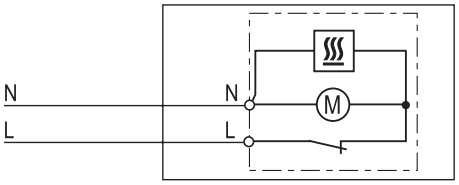

订货代码 Art. No.	型号 Model	工作电压 Operating voltage	功率 Heating capacity	设定范围 Setting range
13051.0-00	支持恒温器的暖风机 Fan Heater with thermostat	230VAC, 50/60Hz	950W	0 to +60℃
13051.0-01	支持恒温器的暖风机 Fan Heater with hygrostat	230VAC, 50/60Hz	950W	65% RH, Factory–set
13059.9-00	支持恒温器的暖风机 Fan Heater with thermostat	120VAC, 50/60Hz	950W	+32 to +140° F

*根据UL499并结合UL508A；according to UL499 in combination with UL5080A

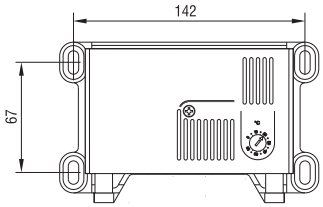

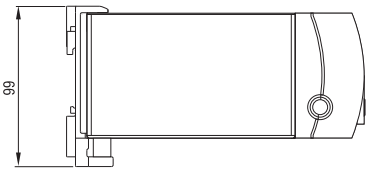

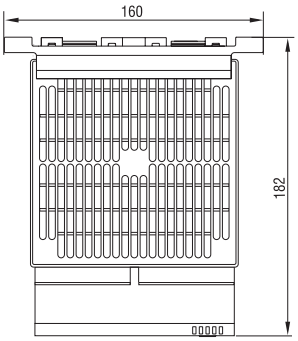

CR 130 750W,850W,950W

产品特性 Features

- 紧凑型设计Compact design
- 双绝缘Double insulated
- 智能温控器Integrated thermostat(optional)
- 导轨或螺丝固定Optional clip or screw fixing

这种紧凑高性能风机加热器能防止产生凝露，为机箱内部提供分布均匀的空气温度环境。塑料外壳具有双绝缘功能，起接触保护作用。这款风机加热器可提供集成的恒温或先的温度或湿度控制恒温器。CR130可固定在配电柜的底部，也可以固定在上。

The compact high performance fan heater prevents formation of condensation and provides an evenly distributed interior air temperature in enclosures with electric/electronic components.
The plastic enclosure provides double insulation and acts as protection against contact. The fan heater is available with integrated thermostat or pre–set hygrostat for temperature or humidity control The CR 030 was designed as a stationary unit for the bottom of the enclosure.
For wall fixing the fan heater CR 130 is resommended.

技术参数 Technical Data

加热元件Heater element	高性能管壳 High performance cartridge
温度保护Temperature safety cut-out	过热保护 to protect against overheating in case of fan failure
	自动复位 automatic reset
加热主体Heater body	极化处理铝型材 extruded aluminium profile
滚珠轴流式风机Axial fan, ball bearing	气流160m³/h,自由流动 Airflow 160m³/h, free flow
	使用寿命50,000小时 at25°C(77°F) service life 50,000h at25°C(77°F)
接线方式Connection	2-极点最大值，2.5mm²固定螺丝溢放口力矩最大值 2-pole max. 2.5mm², clamping screw with strain relief, torque 0.8Nm max.
外壳材料Casing	黑色塑料,UL94V–0标准,V–0防火等级 plastic according to UL94 V-0, black
安装方式Mounting	35mmDIN导轨安装,Clip for 35mm Din rai, EN 50022, Screw fixing (M6)
安装位置Installation position	水平 horizontal
外观尺寸Dimensions	182 x 160x 99mm
重量Weight	大约1.45千克 approx.1.45kg
操作/储存环境Operating/Storage temperature	–45 to +70℃(–49 to +158°F)
防护等级Protection type/Protection class	IP20 / II 双绝缘(double insulated)
备注Note	功率达到2000W以上可定制Other heating capacities from 200W up available on request

*加热器的工作温度：0到+60℃（+32 to+140°F）
Operating temperature of heater with integrated hygrostat: 0 to +60°C(+32 to +140°F)

接线示意图
Connection Diagram

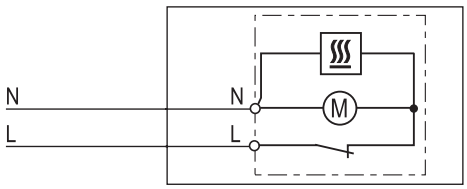

订货代码 Art. No.	型号 Model	工作电压 Operating voltage	功率 Heating capacity	设定范围 Setting range
13051.0-00	支持恒温器的暖风机 Fan Heater with thermostat	230VAC, 50/60Hz	950W	0 to +60℃
13051.0-01	支持恒温器的暖风机 Fan Heater with hygrostat	230VAC, 50/60Hz	950W	65% RH, Factory–set
13059.9-00	支持恒温器的暖风机 Fan Heater with thermostat	120VAC, 50/60Hz	950W	+32 to +140° F

*根据UL499并结合UL508A；according to UL499 in combination with UL5080A

CR 030 COMPACT HIGH-PERFORMANCE FAN HEATER
紧凑高效型加热器(半导体)

CR 030 750W,850W,950W

产品特性 Features

- 紧凑型设计Compact design
- 双绝缘Double insulated
- 智能温控器Integrated thermostat(optional)
- 导轨或螺丝固定Optional clip or screw fixing

这种紧凑高性能风机加热器能防止产生凝露，为机箱内部提供分布均匀的空气温度环境。塑料外壳具有双绝缘功能，起接触保护作用。这款风机加热器可根据要求与温控器连起来控制温度。CS 030可固定在配电柜的底部，也可以固定在墙上。

The compact high performance fan heater prevents formation of condensation and provides an evenly distributed interior air temperature in enclosures with electric/electronic components.
The plastic enclosure provides double insulation and acts as protection against contact. The fan heater is available with optional integrated thermostat for temperature control. The CS 030 was designed as a stationary unit for wall fixing. For fixing on the bottom of the enclosure the fanheater CS 130 is recommended.

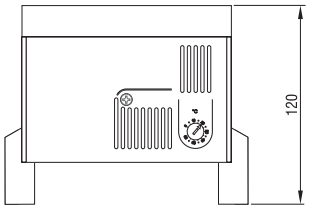

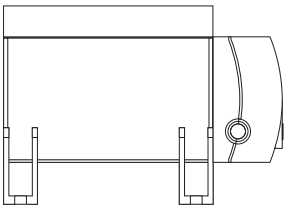

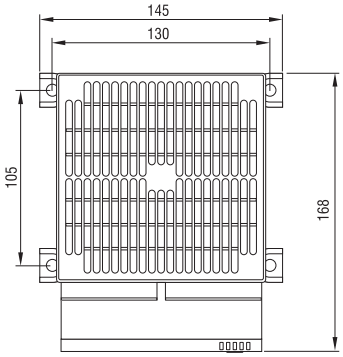

技术参数 Technical Data

温度保护Temperature safety cut–out	过热保护 to protect against overheating in case of fan failure
滚珠风机Axial fan, ball bearing	气流160m3/h,自由流动 160m3/h, free flow,
	使用寿命 50,000小时 service life 50,000h at 25°C (77°F)
接线方式Connection	2-极点最大值。2.5mm²固定螺丝溢放口力矩最大值 2-pole clamp max. 2.5mm² clamping screw
	torque 0.8Nm max.
外壳材料Casing	黑色塑料,UL94V–0标准,V–0防火等级 plastic according to UL94 V–0,black
安装方式Mounting	螺丝安装(M5) Screw fixing (M5)
安装位置Installation position	横向horizontal
外观尺寸Dimensions	168 x 145x 120mm
重量Weight	大约1.20千克 approx.1.20kg
工作温度Operating/Storage temperature	–45 to +70℃(–49 to +158°F)
防护等级Protection type/Protection class	IP20 / II 双绝缘(double insulated)

接线示意图
Connection Diagram

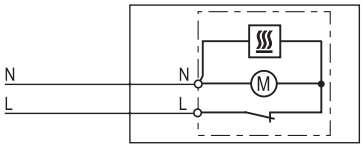

加热功率 CS 030
Heating capacity / Ambient temperature diagram CS 030

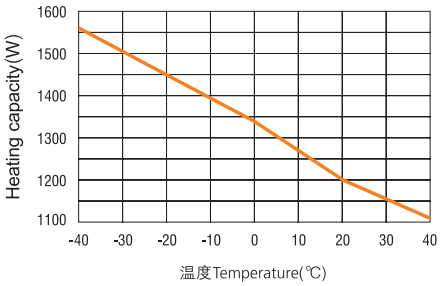

订货代码 Art. No.	型号 Model	工作电压 Operating voltage	功率 Heating capacity	最大电流 Inrush current max.	设定范围 Setting range
03060.0–00	支持恒温器的暖风机 Fan Heater with thermostat	230VAC, 50/60Hz	1200W	13A	0 to +60℃
03060.0–01	不支持恒温器的暖风机 Fan Heater without thygrostat	230VAC, 50/60Hz	1200W	13A	–
03060.9–00	支持恒温器的暖风机 Fan Heater with thermostat	120VAC, 50/60Hz	1200W	16A	+32 to +140° F
03060.9–01	不支持恒温器的暖风机 Fan Heater without thygrostat	120VAC, 50/60Hz	1200W	16A	–

* 室温 at 20℃ (68°F)， at 20℃ (68℃) ambient temperature

CS 130 700W,900W,1200W

产品特性 Features

- 紧凑型设计Compact design
- 高效率散热High heating performance
- 双绝缘Double insulated
- 智能温控器Integrated thermostat(optional)
- 导轨或螺丝固定Optional clip or screw fixing

这种紧凑高性能风机加热器能防止产生凝露，为机箱内部提供分布均匀的空气温度环境。塑料外壳具有双绝缘功能，起接触保护作用。根据要求可与温控器连用来控制温度。CS130具有墙上固定功能，如果需要安装在配电柜底部的话，建议选用CS030。

The compact high performance fan heater prevents formation of condensation and provides an evenly distributed interior air temperature in enclosures with electric/electronic components. The plastic enclosure provides double insulation and acts as protection against contact. The fan heater is available with optional integrated thermostat for temperature control. The CS 130 was designed as a stationary unit for wall fixing. For fixing on the bottom of the enclosure the fan heater CS 030 is recommended.

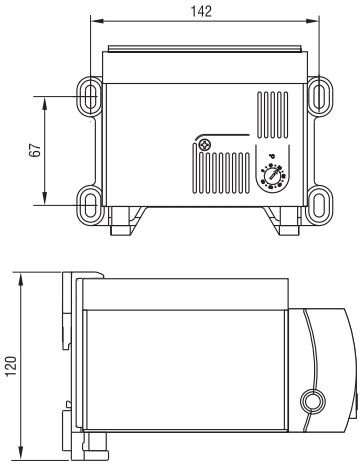

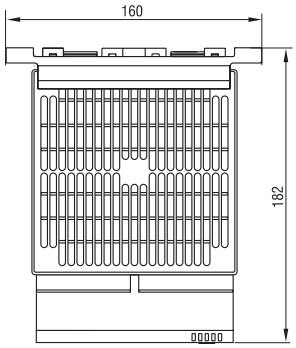

技术参数 Technical Data

加热元件Heater element	PTC自动限温调节元件 PTC resistor, self regulating and temperature limiting
温度保护 Temperature safety cut-out	过热保护 to protect against overheating in case of fan failure
滚珠风机Axial fan, ball bearing	风量见如下图表airflow see table service life 50,000h at 25℃ (77° F)
接线方式Connection	螺丝 2-pole clamp max. 2.5mm² clamping screw torque 0.8Nm max.
外壳材料Casing	黑色塑料,UL94V-0标准,V-0防火等级 plastic according to UL94 V-0,black
安装方式Mounting	35mmDIN导轨安装,clip for 35mm DIN rail, EN 60715
安装位置Installation position	横向horizontal
外观尺寸Dimensions	182 x 160 x 142mm
重量Weight	大约1.25千克 approx.1.25kg
操作/储存环境Operating/Storage temperature	-45 to +70℃(-49 to +158° F)
防护等级Protection type/Protection class	IP20 / II (double insulated)

接线示意图
Connection Diagram

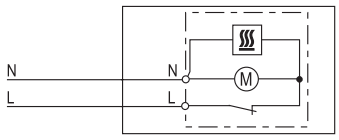

加热功率
Heating capacity / Ambient temperature diagram CS 130

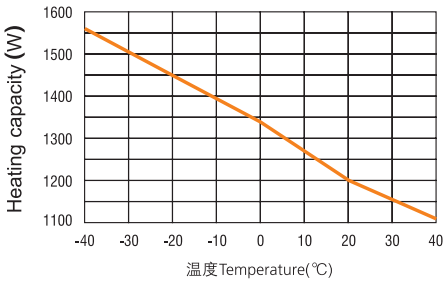

订货代码 Art. No.	型号 Model	工作电压 Operating voltage	功率 Heating capacity	最大电流 Inrush current max.	设定范围 Setting range
13060.0-00	Fan Heater with thermostat	230VAC, 50/60Hz	1,200W	13A	0 to +60℃
13060.0-01	Fan Heater without thermostat	230VAC, 50/60Hz	1,200W	13A	–
13060.9-00	Fan Heater with thermostat	120VAC, 50/60Hz	1,200W	16A	+32 to +140° F
13060.9-01	Fan Heater without thermostat	120VAC, 50/60Hz	1,200W	16A	–

* 室温 at 20℃ (68°F)， * at 20℃ (68°F) ambient temperature

HGM PTC FAN HEATER
PTC风机加热器

HGM050 200W-1500W

产品特性 Features

- 紧凑的设计Compact design
- 导轨式安装Clip fixing
- 使用寿命长Long service life
- 免维护Maintenance free
- 安全温度断流功能Temperature safety cut–out

轻巧型风机加热器可预防冷凝的形成，一体化高性能轴流风扇可提供强力空气循环，使开关箱内温度恒定。当风扇发生故障时，加热器内安全切断开关会自动停止加热器的工作。

Compact fan heater prevents formation of condensation. The integrated high performance axial fan provides forced air circulation and so guarantees an even temperature in enclosures. With internal terminal connector.

技术参数 Technical Data

发热元件Heating element	PTC
温度保护Temperature safety cut–out	防止过热引起的风扇不运转 to protect against overheating in case of fan failure
发热体Heater body	通过极化处理的铝型材anodised extruded aluminium profile
表面温度Surface temperature	最高75℃ max. 75℃
滚珠轴流式风扇 Axial fan, ball bearing	气流自由流动Airflow, free flow AC: 45m³/h (50Hz) or 54m³/h (60Hz) DC: 54m³/h 使用寿命50,000小时 service life 50,000h at 25℃ (77°F)
接线方式Connection	导线引入 internal connection terminal 1.5mm² with strain relief, clamping torque 0.8Nm max.
外壳材料Connection casing	黑色塑料,UL94V–0标准,V–0防火等级 plastic according to UL94 V–0,black
安装方式Mounting	35mmDIN导轨安装,clip for 35mm DIN rail, EN 60715
安装位置Installation position	垂直vertical
操作/储存环境Operating/Storage temperature	–45 to +70℃(–49 to +158°F)
防护等级Protection type/Protection class	IP20 / I (earthed)

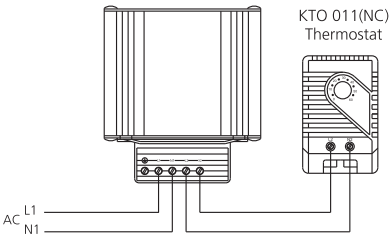

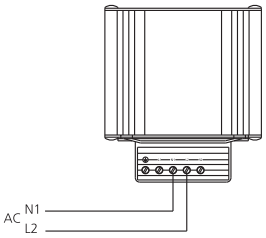

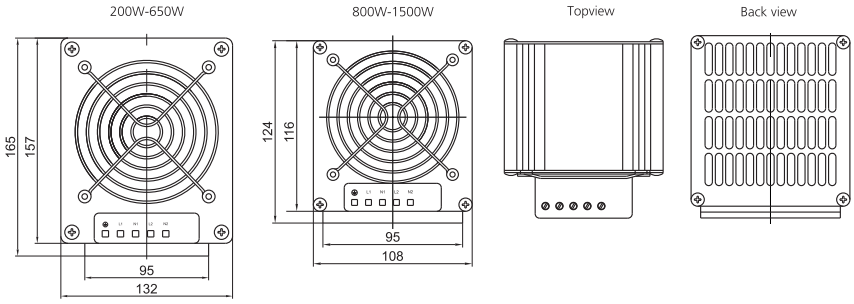

订货代码 Art. No.	工作电压 Operating voltage	功率 Heating capacity	长度(L) Length (L)	重量 Weight (approx.)
05040.0-00	230VAC, 50/60Hz	200W	122mm	0.90kg
05041.0–00	230VAC, 50/60Hz	250W	122mm	0.93kg
05042.0–00	230VAC,50/60Hz	300W	122mm	0.95kg
05043.0–00	230VAC,50/60Hz	400W	122mm	1.00kg
05044.0–00	230VAC, 50/60Hz	650W	132mm	1.15kg
05045.0–00	230VAC, 50/60Hz	800W	136mm	1.50kg
05046.0–00	230VAC,50/60Hz	1000W	136mm	1.54kg
05047.0–00	230VAC,50/60Hz	1200W	136mm	1.58kg
05049.0–00	230VAC,50/60Hz	1500W	136mm	1.65kg

*注意：110VAC；24VDC；48VDC可订做 Notice:110VAC；24VDC；48VDC available

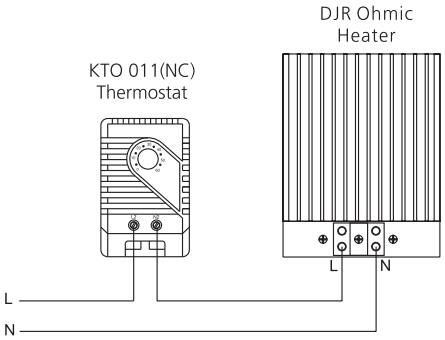

DJR

产品特性 Features

DJR加热器，是根据国标(GB/T-15470-1995)研制生产的散热式电加热器。该产品采用6063-T5特制铝合金型材为传导散热体，为增大其散热面积，每个散热片上都设计有细小的波纹。其内部采用优质Ni80Cr20镍铬合金电阻丝为发热芯，精工制作而成。该产品体积小，重量轻，散热面积大，使用寿命长。接线装置安全可靠，不易损坏。整体设计，结构合理，外型美观。主要应用于高低压开关柜、中置柜、环网柜、端子箱、箱式变电站等电力设备防潮、防凝露、提高电气元器件工作环境温度及一切需要除湿加热的场所，与我司的KT0011系列凝露温度监控器配套使用，可实现除湿升温自动化。该加热器具有加热效果好，使用安全可靠，平均无故障工作时间长，安装方便，国内各型号加热器通用等特点。

DJR Heater. is the development and Production of the heat dissipalion electrical heater based on national standard GB/T-15470-1995. The Product adopts a special aluminum extrusions of 6063-T5 for conducting the radiator, in order to increase the cooling area, and designs small ripples on each heat sink. Its internal uses the quality Ni80Cr20 nickel-chromium alloy resistance wire for heater,seiko produced The Product has small size, light weight, big heat dissipation area and long service life. And the terminal device is safe and reliable, not easy to damaae. As for the overall design, it has reasonable structure and beautiful appearance, mainlV used in high and low voltaqe switch cabinet, centrallV installed cabinet.ring counter, terminal boxbox-tvpe substation and other power equiPment for moisture-Proof,anti-condensation. dehumidification to improve the working environment temperature and all the spaces need dehumidification and heatina. Supporting the use of KT0011 series condensation tempe rature division monitor can realize the dehumidification and warming automation.The heater has the features of good heating effect, safe and reliable usage, long working time without failures. easY installation and unive rsallY used for the domestic various models 0f heater。

技术参数 Technical Data

工作电压：ACl10V、220V、380V或DC220V、380V(客户根据需求来选型)
Working voltage：AC110V、220V、380V or DC220V、380V(to select by the custom

工作频率：50Hz(仅适用于交流电压)
Operating frequency：50Hz(only apply to the AC voltage)

绝缘电阻：>50M欧姆
Insulation resistance：>50M 0hm

抗电强度：>2000V(接线端与铝介质之间)
Dielectric strength：>2000V(between terminal and aluminum medium)

连续工作时间：>5000小时
Continuous working time：>5000 hours

额定功率：50-500W
Rated power：50-500W

订货代码 Art. No.	工作电压 Operating voltage	功率 Heating capacity	外观尺寸（mm） Dimensions	安装孔距（mm） Mounting Holes
DJR-A-1	220V	50-150W	132 X 85 X 23	55
DJR-A-2	220V	150-400W	163 X 100 X 28	55
DJR-B-1	220V	50-150W	144 X 75 X 24	55
DJR-B-2	220V	150-400W	155 X 100 X 23	55
DJR-C-1	220V	50-150W	148 X 75 X 21	55
DJR-C-1	220V	150-400W	148 X 75 X 21	55
DJR-C-2	220V	50-150W	210 X 104 X 26	55
DJR-C-2	220V	150-400W	210 X 104 X 26	55

FF 018 FILTER FAN 风机过滤器

saipwell

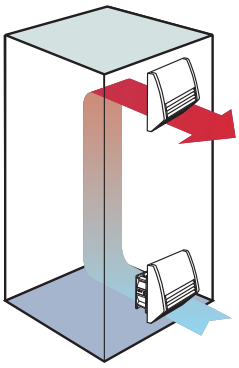

Enclosure air–conditioning using a filter fan and exit filter

机箱空调使用一个过滤器的风机和出口过滤器

FF 018 200M/3H

产品特性 Features

- 低噪音Very low noise
- 体积小Minimal depth in enclosure
- 多功能设计Functional design
- 易安装Time–saving installation
- 防腐蚀,防紫外线 Weather proof and UV resistant

技术参数 Technical Data

轴流式滚珠风机 Axial fan, ball bearing	使用寿命最小50,000小时 service life min. 50,000h at 25℃/77° F (65% RH) fan body aluminium, rotor plastic
连接方式Connection	2 wires with pressure clamps 2.5mm^2, length 100mm
外壳材料 Casing (filter fan and exit filter)	淡灰色塑料,UL94V–0,V–0防火等级 plastic according to UL94 V–0,light grey
机罩(风机过滤器和风机出风口) Hood (filter fan and exit filter)	淡灰色塑料,UL94V–0,V–0防火等级 plastic according to UL94 V–0,light grey 防腐和防紫外线UL746C (f1) weather proof and UV light resistant according to UL746C (f1)
安装架Mounting frame	用工业双面粘合济固定在外面的附件上， 在确定操作的情况下可以用另外的螺丝。 with double–sided industrial adhesive band for fixing to the outside of enclosure; certain operating circumstances can make the additional use of screws necessary (see drilling template); included in the delivery of the filter fans is a template for the enclosure cut–out
过滤垫Filter mat	过滤度94% ,G4 acc. to DIN EN 779, filtering degree 94%
过滤材料Filter material	高级合成纤维构造，100℃耐高温，F1型自灭材料， 可循环清理洗涤或用吸尘器清理 synthetic fibre with progressive construction, temperature resistant to 100℃, self–extinguishing class F1; moisture resistant to 100% RH, reusable–cleaning by washing or vacuuming
操作/储存环境Operating/Storage temperature	–45 to +70℃ (–49 to +158° F)
防护等级Protection type/Protection class	IP54 / I (earthed)

*可用F5过滤器增加保护等级到IP55，但会减少空气流量。
*Using fine filter mats type F5 increases the protection type to Ip55, but reduces the air volume.

1.安装架带粘性的封条阻止了灰尘和水进入到柜内。
2.通风口多功能的设计有效阻止了掉落的灰尘和水，其优势是过滤垫不会很快的被灰尘弄脏，这样就不需要经常更换。
3.风道使风机过滤器在操作中特别安静。
4.多功能和现代化的设计使安装时间减少。
5.所有的风机过滤器，都有气流监控器。
6.EMC版本和其它电压可按要求提供。
7.空气的方向可以随轴流式风机方向的改变而改变。

1. The self–adhesive seal of the mounting frame prevents dust and water from entering the cabinet.
2. Functional design of the intake and exit fan hoods very effectively prevents direct intrusion of falling water and dust. The advantage is that the filter mat does not get so quickly contaminated with dirt and thus does not need to be exchanged so often.
3. The air channelling makes the filter fan particularly quiet in operation.
4. Functional and modern design enables time–saving assembly and maintenance.
5. All filter fan models are also available with integrated airflow monitor.
6. EMC versions and other voltages on request.
7. The direction of air can easily be switched by reversing the axial fan (sizes 1 to 3).

订货代号 Art. No.	操作电压 Operating voltage	空气流量 Air volume free flow	空气流量(带过滤罩) Air volume free flow	电流 Current consumption	功率 Power consumption	平均噪音 Average noise level (DIN EN ISO4871)	箱体深度 Depth in enclosure	开孔尺寸 Enclosure cut-out	重量 Weight (approx.)
01800.0–00	230VAC, 50Hz	21m^3/h	16m^3/h	80mA	13W	31dB (A)	45mm	97 x 97mm + 0.4	0.60kg
01801.0–00	230VAC, 50Hz	55m^3/h	42m^3/h	100mA	15W	40dB (A)	58mm	125 x 125mm + 0.4	1.00kg
01802.0–00	230VAC, 50Hz	102m^3/h	68m^3/h	100mA	15W	39dB (A)	86mm	176 x 176mm + 0.4	1.30kg
01800.0–01	120VAC, 60Hz	24m^3/h	18m^3/h	160mA	13W	31dB (A)	45mm	97 x 97mm + 0.4	0.60kg
01801.0–01	120VAC, 60Hz	63m^3/h	48m^3/h	180mA	15W	40dB (A)	58mm	125 x 125mm + 0.4	1.00kg
01802.0–01	120VAC, 60Hz	117m^3/h	78m^3/h	180mA	15W	39dB (A)	86mm	176 x 176mm + 0.4	1.30kg

SPL

简介 Introduction

SPL柜内照明灯座采用高分子阻燃工程塑料PC材料（美国杜邦UL94-0）注塑成型，具有透光率高。耐高温，结构强度高等特点

采用E27标准陶瓷螺口灯座，透明保护罩倒扣式卡入结构，使用安装各种白炽灯，节能灯，并安装，更换，维护方便容易，最大适用照明功率达到60W。

设置有插入式铜端子，并设有压线夹，抵抗拉拔，防止脱落，同时使接线更方便快捷。适用于配电柜，各种控制柜施工维护照明用。

The lam holder of SPL cabinet lighting lamp is made of flame-retardant engineering plastics of polymer PC material (DuPont UL94-0). It is of such features as high transmittance, high temperature and old-aging resistance, structural strength, etc.

With transparent shield button card structure, standard E27 Edison ceramics screw lamp holders , are suitable for various incandescent and energy-saving lamps. It is easy to install, replace and maintain. The maximum power for lighting can be up to 60W.

There are plug-in copper terminals and pressure clamp on the connection location, in order to prevent the loose of connection, and also to make it more convenient for connection. It is suitable for lighting in construction and maintenance of all kinds of distribution cabinets and control cabinets.

产品特点 Features

- 适用于白炽灯，节能灯，最大照明功率到60W。
  Apply to incandescent lamps, energy saving lamps, and the max lighting power can be up to 60W.
- CE认证 With CE cert.

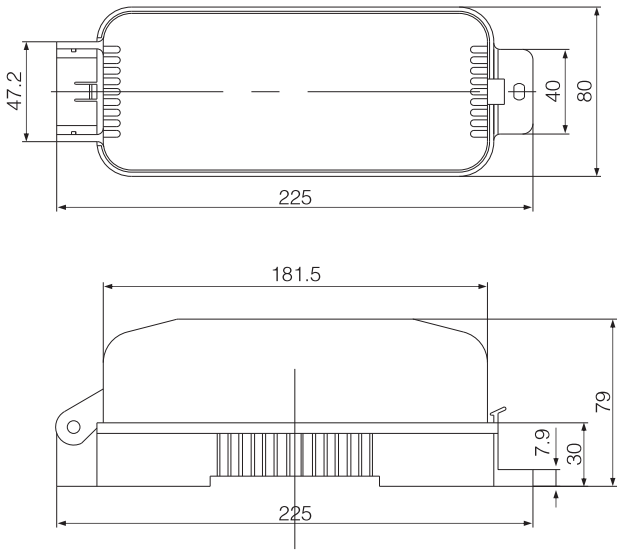

LED025

产品特性 Features

- 宽电压范围Wide voltage range
- 集成装置Integrated device
- 长寿、免维护的LED技术Longevity、Maintenance-free LED technology
- 磁铁或螺钉固定
- 开/关开关或光传感器ON/OFF Switch or a light sensor

LED 025适用于所有类型的面板和附件，尤其是在狭小的空间。由于使用高端LED技术，使灯有一个很长的使用寿命。可以选用防滑橡胶磁铁快速定位在任何钢壳部位。也可以选用固定机械。功率输出允许多达10个灯是彼此连接。

LED 025 applies to all types of panels and accessories, especially in tight space. By using high-end LED technology, the lamp has a long service life. You can use non-slip rubber magnet to quickly locate on any steel parts. You can also choose mechanical fixation. Power output allows more than ten lamps are connected to each other.

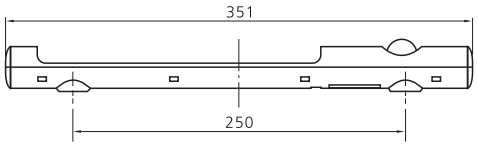

技术参数 Technical Data

功耗Power waste	5 w
光度Luminosity	同75 w灯泡 Same 75 W light bulb
灯类型Lamp type	LED,120°角的辐射 Radiation of LED, 120 浅色:日光,颜色温度:6500 k Light: sunlight, color temperature: 6500 K
服务寿命Service life	60000 h + 20°C(+ 68°F)
连接Connect	2极连接器 2 pole connector AC: 2.5A / 240VAC, 颜色:白色Color: white DC: 2.5A / 60VDC, 颜色:蓝色Color: Blue
安装Install	磁铁固定或螺钉固定(M5)Magnet fixation or screw fixation (M5) 250毫米中心 250 mm Center
套管Casing	塑料、透明Plastic, transparent
维度Dimensions	看图画Look at the picture
操作/储存温度 Operation / storage temperature	-30 to +60°C (-22 to +140°F) / -40 to +85°C (-40 to +185°F)
操作/存储水分 Operation / storage of water	90% RH(不结露)90% RH (no dew)
保护类型/保护类 Protection type / protection	IP20 / II(双绝缘)IP20 / II (double insulation)

注：连接器和电缆不包括，这些部分可以单独购买。可以根据客户要求。
Note: connectors and cables are not included, and these parts can be purchased separately. Can be based on customer requirements.

磁铁固定 Magnet fixation	螺钉固定 Screw fixation	操作电压 Operating voltage	开关 Switch	重量(大约) Weight (approx.)
02540.0-00	02540.0-01	100-240VAC,	开/关电灯开关ON / OFF light switch	0.2kg
02540.1-00	02540.1-01	24-48VDC	开/关电灯开关ON / OFF light switch	0.2kg
02541.0-00	02541.0-01	100-240VAC, 50/60Hz	传感器1 Sensor 1	0.2kg
02541.1-00	02541.1-01	24-48VDC	传感器2 Sensor 2	0.2kg

适用于单个组件（电缆和连接器）Applies to individual components (cable and connector)

赛普电气集团有限公司
SAIP ELECTRIC GROUP CO., LTD.

电话.TEL: +86-577-62760721

传真.FAX: +86-577-62760731

邮箱.E-mail: saip@saip.cn

网址.Website: www.saipwell.com.cn

浙江省乐清市柳市工业区

Liushi Industrial Zone,Yueqing,Zhejiang,325604 China

上海斯普威尔电气有限公司
SHANGHAI SAIPWELL ELECTRIC CO., LTD.

电话.TEL: +86-21-33050667

传真.FAX: +86-21-33050669

邮箱.E-mail: saip@saip.cn

网址.Website: www.saipwell.com

上海市宝山区蕴川路512号

No.512,Wenchuan Road,Shanghai,201906 China